Catalog

Low voltage Process performance motors

Power and productivity
for a better world™

We provide motors and generators, services and expertise to save energy and improve customers' processes over the total lifecycle of our products, and beyond.

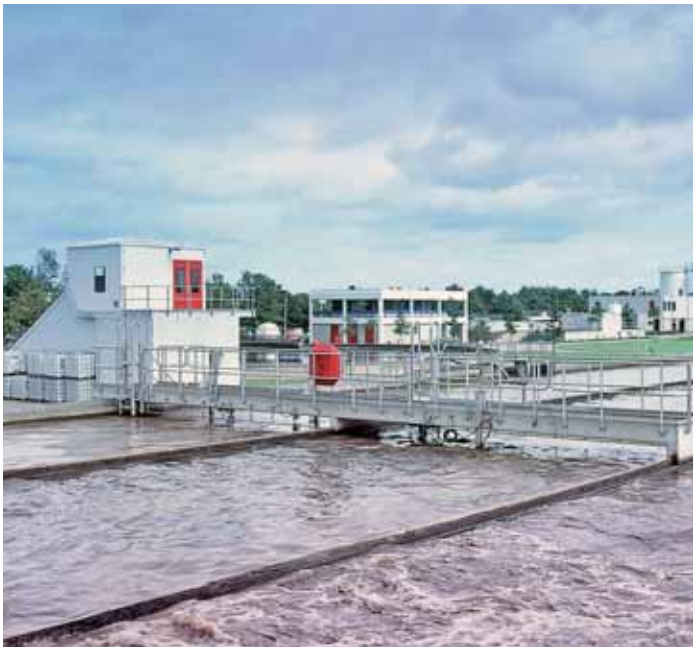

Low voltage Process performance motors
Sizes 63 to 450, 0.12 to 1000 kW

04 General information
07 General technical specification

15 IE2 High efficiency cast iron motors
16 Mechanical design
32 Rating plates
33 Ordering information
34 Technical data
42 Variant codes
49 Dimension drawings
60 Accessories
67 Construction
68 Cast iron motors in brief

71 IE2 High efficiency aluminum motors
72 Mechanical design
82 Rating plates
83 Ordering information
84 Technical data
88 Variant codes
93 Dimension drawings
107 Accessories
109 Aluminium motors in brief

111 IE3 Premium efficiency cast iron motors
112 Mechanical design
119 Ordering information
120 Technical data

122 Total product offer

123 Visit our web site

ABB reserves the right to change the design, technical specification and dimensions without prior notice.

General information

Standards

ABB motors are of the totally enclosed, three phase squirrel cage type, built to comply with international IEC and EN standards. Motors conforming to other national and international specifications are also available on request.

All production units are certified to ISO 9001 inter-national quality standard as well ISO 14000 environ-mental standard and confirm to all applicable EU Directives.

IEC / EN

Electrical	Mechanical
IEC/EN 60034-1	IEC 60072
IEC/EN 60034-2-1	IEC/EN 60034-5
IEC/EN 60034-30	IEC/EN 60034-6
IEC 60034-8	IEC/EN 60034-7
IEC 60034-12	IEC/EN 60034-9
	IEC 60034-14

CERTIFICATE OF APPROVAL

This is to certify that the Quality Management System of:

ASEA BROWN BOVERI, S.A.
Automation Products
Unidades de Negocio: Motores Baja Tensión, Condensadores, Accionamientos y Máquinas Eléctricas
Sant Quirze del Vallés, Barcelona
Spain

has been approved by Lloyd's Register Quality Assurance to the following Quality Management System Standards:

ISO 9001:2008
ISO 14001:2004

The Quality Management System is applicable to:

Design, production and sales of electrical motors and generators, drives and power electronical equipment, capacitors, automatic banks, in low, middle and high voltage.

M000001

DET NORSKE VERITAS
MANAGEMENT SYSTEM CERTIFICATE

ABB AB
LV Motors
VÄSTERÅS, SWEDEN

ISO 9001:2008, ISO 14001:2004

Design, manufacture and marketing of AC motors, generators and their components with centre heights 112 to 280 mm

M000003

BUREAU VERITAS
Certification

Certification

ABB Oy, Motors

ISO 9001:2000

M000002

International motor efficiency standards

A worldwide energy efficiency classification system now exists for low voltage three-phase asynchronous motors. This system increases the level of harmonization in efficiency regulations around the world.

International Electrotechnical Commission (IEC) standard IEC/EN 60034-30:2008 defines energy-efficiency (IE code) classes for single speed, three-phase, 50 and 60 Hz induction motors. The standard is part of an effort to unify motor testing procedures and efficiency and product labeling requirements to enable motor purchasers worldwide to easily recognize premium efficiency products. The efficiency levels defined in IEC/EN 60034-30 are based on test methods specified in IEC/EN 60034-2-1:2007.

To promote transparency in the market, IEC 60034-30 states that both the efficiency class and efficiency value must be shown on the motor rating plate and in product documentation. The documentation must clearly indicate the efficiency testing method used as the different methods can produce differing results.

IEC/EN 60034-2-1:2007

IEC/EN 60034-2-1, which came into force in September 2007, introduces new rules concerning the testing methods to be used for determining losses and efficiency.

It offers two ways of determining efficiency; the direct and indirect methods. The standard specifies the following parameters for determining efficiency using the indirect method:

- reference temperature
- three options for determining P_{LL} (additional load losses): measurement, estimation and mathematical calculation.

The resulting efficiency values differ from those obtained under the previous IEC testing standard, IEC 60034-2:1996. It must be noted that efficiency values are only comparable if they are measured using the same method.

Efficiency testing standard IEC/EN 60034-2-1:2007
Direct method Indirect method: - Measurement; P_{LL} calculated from load tests - Estimation; P_{LL} at 2.5% – 1.0% of input power at rated load between 0.1 kW and 1000 kW - Mathematical calculation; Eh star – alternative indirect method with mathematical calculation of P_{LL}
Winding losses in stator and rotor determined at [25°C + actual temperature rise measured]

IEC/EN 60034-30:2008

IEC/EN 60034-30:2008 defines three International Efficiency (IE) classes for single speed, three-phase, cage induction motors.

- IE1 = Standard efficiency (EFF2 in the former European classification scheme)
- IE2 = High efficiency (EFF1 in the former European classification scheme and identical to EPAct in the USA for 60 Hz)
- IE3 = Premium efficiency (identical to "NEMA Premium" in the USA for 60 Hz)
- IE4 = A future level above IE3

Efficiency levels defined in IEC/EN 60034-30 are based on test methods specified in IEC/EN 60034-2-1:2007.

Compared to the former European efficiency classes defined by the CEMEP agreement the scope has been expanded.

IEC/EN 60034-30 covers almost all motors (for example standard, hazardous area, marine, brake motors)

- Single speed, three-phase, 50 Hz and 60 Hz
- 2-, 4- or 6-pole
- Rated output from 0.75 to 375 kW
- Rated voltage U_N up to 1000 V
- Duty type S1 (continuous duty) or S3 (intermittent periodic duty) with a rated cyclic duration factor of 80 % or higher
- Capable of operating direct online

The following motors are excluded from IEC 60034-30:

- Motors made solely for converter operation
- Motors completely integrated into a machine (for example, pump, fan or compressor) that cannot be tested separately from the machine

Minimum efficiency values defined in IEC 60034-30:2008 standard (based on test methods specified in IEC 60034-2-1:2007)

Output	IE1 Standard efficiency			IE2 High efficiency			IE3 Premium efficiency		
kw	2 pole	4 pole	6 pole	2 pole	4 pole	6 pole	2 pole	4 pole	6 pole
0.75	72.1	72.1	70.0	77.4	79.6	75.9	80.7	82.5	78.9
1.1	75.0	75.0	72.9	79.6	81.4	78.1	82.7	84.1	81.0
1.5	77.2	77.2	75.2	81.3	82.8	79.8	84.2	85.3	82.5
2.2	79.7	79.7	77.7	83.2	84.3	81.8	85.9	86.7	84.3
3	81.5	81.5	79.7	84.6	85.5	83.3	87.1	87.7	85.6
4	83.1	83.1	81.4	85.8	86.6	84.6	88.1	88.6	86.8
5.5	84.7	84.7	83.1	87.0	87.7	86.0	89.2	89.6	88.0
7.5	86.0	86.0	84.7	88.1	88.7	87.2	90.1	90.4	89.1
11	87.6	87.6	86.4	89.4	89.8	88.7	91.2	91.4	90.3
15	88.7	88.7	87.7	90.3	90.6	89.7	91.9	92.1	91.2
18.5	89.3	89.3	88.6	90.9	91.2	90.4	92.4	92.6	91.7
22	89.9	89.9	89.2	91.3	91.6	90.9	92.7	93.0	92.2
30	90.7	90.7	90.2	92.0	92.3	91.7	93.3	93.6	92.9
37	91.2	91.2	90.8	92.5	92.7	92.2	93.7	93.9	93.3
45	91.7	91.7	91.4	92.9	93.1	92.7	94.0	94.2	93.7
55	92.1	92.1	91.9	93.2	93.5	93.1	94.3	94.6	94.1
75	92.7	92.7	92.6	93.8	94.0	93.7	94.7	95.0	94.6
90	93.0	93.0	92.9	94.1	94.2	94.0	95.0	95.2	94.9
110	93.3	93.3	93.3	94.3	94.5	94.3	95.2	95.4	95.1
132	93.5	93.5	93.5	94.6	94.7	94.6	95.4	95.6	95.4
160	93.7	93.8	93.8	94.8	94.9	94.8	95.6	95.8	95.6
200	94.0	94.0	94.0	95.0	95.1	95.0	95.8	96.0	95.8
250	94.0	94.0	94.0	95.0	95.1	95.0	95.8	96.0	95.8
315	94.0	94.0	94.0	95.0	95.1	95.0	95.8	96.0	95.8
355	94.0	94.0	94.0	95.0	95.1	95.0	95.8	96.0	95.8
375	94.0	94.0	94.0	95.0	95.1	95.0	95.8	96.0	95.8

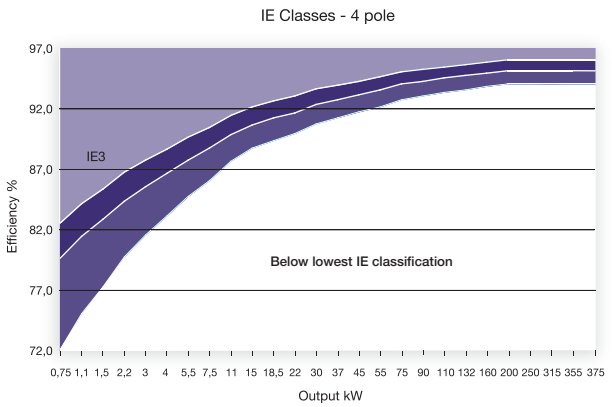

M000416

ABB and efficiency standards

ABB determines efficiency values according to IEC/EN 60034-2-1 using the low uncertainty method i.e. indirect method, with additional load losses determined by measurement.

ABB has a full range of IE2 motors – with many available from stock – and a broad range of IE3 motors.

As the world market leader, ABB offers the largest range of LV motors available. It has long advocated the need for efficiency in motors, and high efficiency products (EFF1 in the former European classification scheme) have formed the core of its portfolio for many years.

General technical specification
Mechanical and electrical design

Mounting arrangements

	Code I/Code II						Product code pos. 12
Foot-mounted motor	IM B3 IM 1001	IM V5 IM 1011	IM V6 IM 1031	IM B6 IM 1051	IM B7 IM 1061	IM B8 IM 1071	A = foot-mounted, term.box top R = foot-mounted, term.box RHS L = foot-mounted, term.box LHS
	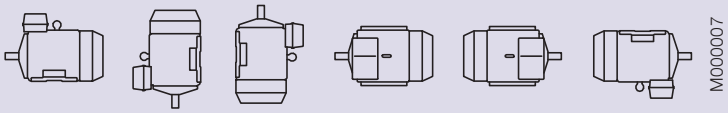 M000007						
Flange-mounted motor, large flange	IM B5 IM 3001	IM V1 IM 3011	IM V3 IM 3031	*) IM 3051	*) IM 3061	*) IM 3071	B = flange mounted, large flange
	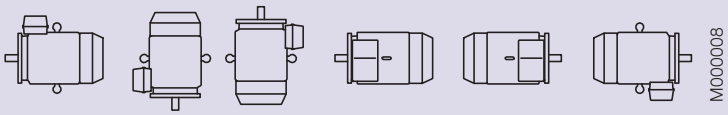 M000008						
Flange-mounted motor, small flange	IM B14 IM 3601	IM V18 IM 3611	IM V19 IM 3631	*) IM 3651	*) IM 3661	*) IM 3671	C = flange mounted, small flange
	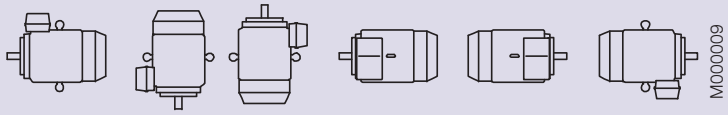 M000009						
Foot- and flange-mounted motor with feet, large flange	M B35 IM 2001	IM V15 IM 2011	IM V36 IM 2031	*) IM 2051	*) IM 2061	*) IM 2071	H = foot/flange-mounted, term. box top S = foot/flange-mounted, term. box RHS
	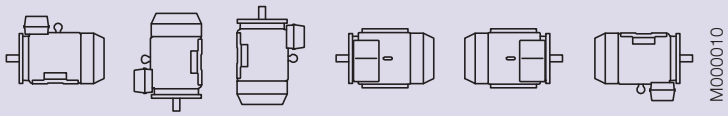 M000010						
Foot- and flange-mounted motor with feet, small flange	IM B34 IM 2101	IM V17 IM 2111	IM 2131	IM 2151	IM 2161	IM 2171	T = foot/flange-mounted, term. box RHS
	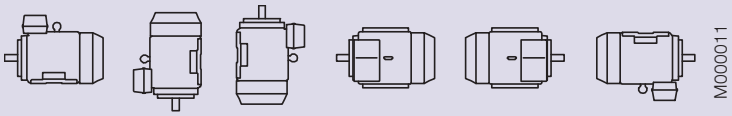 M000011						
Foot-mounted motor, shaft with free extensions	IM 1002	IM 1012	IM 1032	IM 1052	IM 1062	IM 1072	J = foot/flange-mounted, small flange
	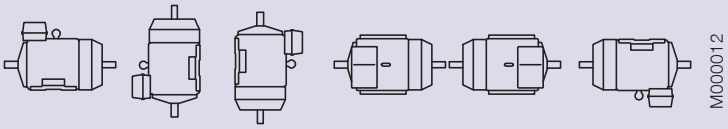 M000012						

*) Not stated in IEC 60034-7.

Note: In case of motors mounted with the shaft upwards and water or liquid are expected to go down along the shaft, the user must take into account to mount some means capable of preventing it.

Cooling

Designation system concerning methods of cooling refers to standard IEC 60034-6.

Example

IC 4 (A) 1 (A) 6

International Cooling

Circuit arrangement
0: Free circulation (open circuit)
4: Frame surface cooled

Primary coolant
A for air (omitted for simplified designation)

Method of movement of primary coolant
0: Free convection
1: Self-circulation
6: Machine-mounted independent component

Secondary coolant
A for air (omitted for simplified designation)
W for water

Method of movement of secondary coolant
0: Free convection
1: Self-circulation
6: Machine-mounted independent component
8: Relative displacement

Degrees of protection: IP code/IK code

Classification of degrees of protection provided by enclosures of rotating machines are refers to:

- Standard IEC 60034-5 or EN 60529 for IP code
- Standard EN 50102 for IK code

IP protection:
Protection of persons against getting in contact with (or approaching) live parts and against contact with moving parts inside the enclosure. Also protection of the machine against ingress of solid foreign objects. Protection of machines against the harmful effects due to the ingress of water.

IP 5 5

Characteristic letter

Degree of protection to persons and to parts of the motors inside the enclosure
2: Motors protected against solid objects greater than 12 mm
4: Motors protected against solid objects greater than 1 mm
5: Dust-protected motors
6: Dust-tight motors

Degree of protection provided by the enclosure with respect
to harmful effects due to ingress of water
3: Motors protected against spraying water
4: Motors protected against splashing water
5: Motors protected against water jets
6: Motors protected against heavy seas

IK code: Classification of degrees of protection provided by enclosure for motors against external mechanical impacts.

IK 08

International mechanical protection

Characteristic group

Relation between IK code and impact energy:

IK code	IK 0	IK 01	IK 02	IK 03	IK 04	IK 05	IK 06	IK 07	IK 08	IK 09	IK 10
Impact energy Joule	*	0.15	0.2	0.35	0.5	0.7	1		2 ABB Standard	5	10	20

* not protected according to EN 50102

Insulation

ABB uses class F insulation systems, which, with temperature rise B, is the most common requirement among industry today.

The use of Class F insulation with Class B temperature rise gives ABB products a 25° C safety margin. This can be used to increase the loading for limited periods, to operate at higher ambient temperatures or altitudes, or with greater voltage and frequency tolerances. It can also be used to extend insulation life. For instance, a 10 K temperature reduction will extend the insulation life.

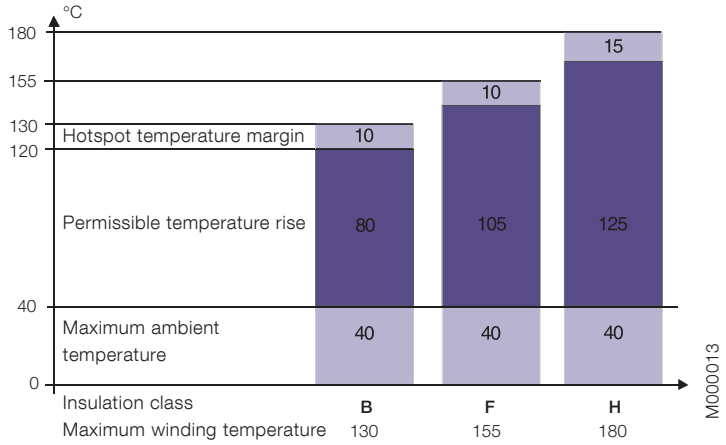

Safety margins per insulation class

Class F insulation system

- Max ambient temperature 40° C
- Max permissible temperature rise 105 K
- Hotspot temperature margin + 10 K

Class B rise

- Max ambient temperature 40° C
- Max permissible temperature rise 80 K
- Hotspot temperature margin + 10 K

Insulation system temperature class

- Class F 155° C
- Class B 130° C
- Class H 180° C

Surface treatment

ABB Process performance motors are provided as standard with a painting system that corresponds to corrosion category C3M specified by ISO/EN 12944:2. ISO/EN 12944 divides durability into 3 ranges: low (L), medium (M) and high (H). Low (L) durability corresponds to 2-5 years, medium (M) to 5-15 years and high (H) to more than 15 years. ABB surface treatment corresponds to medium (M) durability.

Durability does not represent a guaranteed time span. Instead it is a technical consideration that can help the owner to set up a maintenance program. Maintenance is often required at more frequent intervals because of fading, chalking, combination or wear and tear or for other reasons.

Other corrosion categories (C4M and C5M) are available as options. In addition surface treament to Norsok requirements (774) for offshore environments is available as an option. Please see the variant code section for exact availability.

Standard ABB colour is Munsell Blue 8B 4.5/3.25. Other colours are available and can be ordered with variant code 114.

Classification of atmospheric environments according to ISO 12944:2 based on thickness loss.

Corrositivity categories	Outdoor atmospheres	Indoor atmospheres	ABB
C1 - Very low	-	Heated buildings with clean atmospheres, e.g. offices, shops, schools, hotels.	
C2	Atmospheres with low level of pollution. Mostly rural areas.	Unheated buildings where condensation may occur e.g. depots, sport halls	
C3 - Medium	Urban and industrial atmospheres, moderate sulfur dioxide pollution. Coastal areas with low salinity.	Production rooms with high humidity and some air pollution e.g. food-processing plants, laundries, breweries, dairies	Standard surface treatment
C4- High	Industrial areas and coastal areas with moderate salinity.	Chemical plants, swimming pools, coastal ship- and boatyards.	Optional surface treatment with variant code 115
C5-I - Very high	Industrial areas with high humidity and aggressive atmosphere.	Buildings or areas with almost permanent condensation and with high pollution.	
C5-M - Very high	Coastal and offshore areas with high salinity.	Buildings or areas with almost permanent condensation and with high pollution.	Optional surface treatment with variant code 754

Frequency converter drives for Process performance motors

Squirrel cage induction motors offer excellent availability, reliability and efficiency. With a frequency converter – a variable speed drive (VSD) – the motor will deliver even better value. Instead of running the motor at full speed all the time, the variable speed drive enables speed adjustment based on actual needs. This also makes it possible to control the process accurately and in some cases even to improve the capacity of the process by operating at speeds higher than the nominal.

In contrast to conventional direct on line (DOL) applications, VSDs make smooth starting possible. This significantly reduces the stress to the motor and driven application. Smooth starting also means that the supply network is not affected by high starting current transients, a factor which can be taken into account in the design of the network.

The utilization of ABB Process performance motors together with variable speed drives, and especially with ABB Industrial Drives, usually provides substantial energy savings as the speed and thus the power required by the process can be optimized. Energy savings deliver not only environmental but also financial benefits. ABB's Process performance motors are designed for both DOL and variable speed operation. A wide range of options is available, enabling the motors to be adapted for even the most demanding applications.

When selecting Process performance motors for variable speed drives, the following points must be taken into consideration:

1. Dimensioning

The voltage (or current) fed by the frequency converter is not purely sinusoidal. This may increase motor losses, vibration, and noise levels. Furthermore, a change in the distribution of losses may affect the motor's temperature rise. In each case, the motor must be correctly sized according to the instructions supplied for the specific frequency converter.

When using ABB converters, please use ABB's DriveSize program for dimensioning purposes. This tool utilizes dimensioning rules based on comprehensive combined type tests.

For manual dimensioning, please note that the loadability (or load capacity) curves provided in this catalogue and in the respective manuals are indicative only. Exact values for the specific motor and converter are available on request. In addition to thermal dimensioning, an adequate torque margin must be maintained for stability. The maximum torque of the motor must be at least 30% higher than the load torque over the whole duty range.

The voltage drop in the supply cables must also be taken into consideration, especially in cases where long supply cables are used.

2. Operating speed, vibrations and shaft seals

Process performance motors are designed to operate over a wide speed range and in most cases also at significantly higher speeds than the nominal speed. The maximum speed can be found on the rating plates or by using the DriveSize tool. In addition to the motor speed range, please ensure that the maximum or critical speed of the entire application is not exceeded.

If a particularly low level of vibration is required, motors with improved balancing (variant code 417) should be used.

In high speed applications, the use of labyrinth seals (variant code 783) instead of V rings should be considered.

Guideline maximum speed values for Process performance motors are shown in Table 1.

Table 1. Guideline maximum speed values for Process performance cast iron motors

Frame size	Speed r/min	
	2-pole	4-pole
71-80	6000	4500
90-100	6000	6000
112-200	4500	4500
225-250	3600	3600
280	3600	2600
315	3600	2300
355 SM, ML	3600	2000
355 LKA	3600	2000
355 LKB	3000	2000
400	3600	1800
450	3000	1800

3. Ventilation

When the motor is operated at low speeds the cooling capacity of the fan decreases, reducing the motor's load capacity. A separate constant speed fan (variant codes 183, 189 and 422) can be used to increase cooling capacity.

At high speeds, the use of metal fans (variant code 068) instead of plastic ones should be considered. If a low noise level is required, the use of unidirectional low noise fans (variant codes 044 and 045) is recommended.

4. Lubrication

In variable speed applications, the bearing temperature varies as a function of the speed and motor load. In such cases, the most accurate re-lubrication intervals can be obtained by measuring the bearing temperature under normal operating conditions. If the measured temperature is higher than +80°C, the re-lubrication intervals specified on the lubrication plate or in the motor manual must be shortened or lubricants suitable for high operating temperatures must be used. See the ABB Low Voltage Motor Manual.

In the case of continuous operation at very low speeds as well as at very low temperatures (below 20°C), the lubrication capabilities of standard greases may not be sufficient and special greases with additives are needed. For more information, please contact ABB.

When motors are equipped with sealed bearings, i.e. bearings greased for life, it must be noted that if the operating temperature differs from the design temperature, the bearing lifetime will also be different. More information on bearing lifetimes can be found in the product-specific sections of this catalogue and in the relevant manuals.

The use of so-called conductive greases for elimination of bearing currents is not recommended due to their poor lubrication characteristics and low conductivity.

5. Winding insulation

In order to ensure that motors operate reliably, the effects of non-sinusoidal converter output voltages must be taken into consideration when selecting the correct insulation system for the motor and output filters for the converter.

When using ABB's ACS800 and ACS550 drives with uncontrolled DC voltage, the insulation and filters must be selected according to Table 2.

Table 2. Selection of motor winding insulation and converter output filters for motors used of ABB ACS800 or ACS550 drives with uncontrolled DC voltage

Winding insulation and filters required	
$U_N \leq 500$ V	ABB Standard insulation
$U_N \leq 600$ V	ABB Standard insulation + dU/dt filters OR ABB Special insulation (variant code 405)
$U_N \leq 690$ V	ABB Special insulation (variant code 405) AND dU/dt-filters at converter output
600 V < $U_N \leq 690$ V cable length > 150 m	ABB Special insulation (variant code 405)

For more information on dU/dt filters, please see the relevant ABB Drives catalogues.

In cases where the instructions shown in table 2 cannot be applied, and for other converters, selection must be based on the voltages present at the motor terminals:

The allowed phase-to-ground voltage peaks at the motor terminals are:

- ABB Standard Insulation 1300 V peak
- ABB Special Insulation (variant code 405) 1800 V peak

The maximum allowed phase-to-phase voltage peaks at the motor terminals, as a function of the pulse rise time, are shown in figure 1. The highest curve, "ABB Special Insulation", applies to motors with special winding insulation for frequency converter supply, variant code 405. "ABB Standard Insulation" applies to motors with the standard design.

Figure 1 The maximum allowed phase-to-phase voltage peaks at the motors terminals, as a function of the pulse rise time

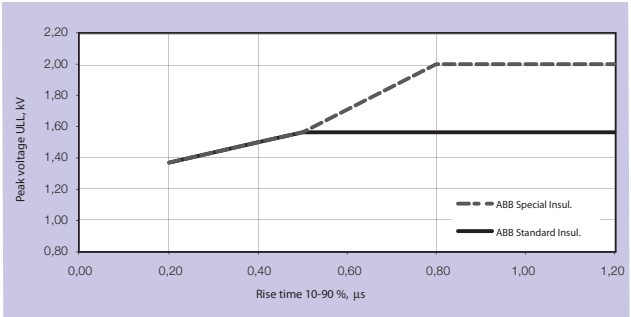

6. Bearing currents

Bearing voltages and currents must be avoided in all motors to ensure reliable operation of the entire application. Assuming the use of ABB ACS800 or ACS550 drives, with uncontrolled DC voltage, insulated bearings (variant code 701) and/or properly dimensioned filters at the converter must be used according to Table 3. For other alternatives and converter types, please contact ABB. When ordering, clearly state which alternative will be used.

For more information about bearing currents and voltages, please see the "Bearing currents in AC drive systems" Fact File or contact ABB.

Table 3. Prevention of bearing currents in motors used with ABB's ACS800 and ACS550 drives with uncontrolled DC-voltage

Nominal Power (PN) and / or Frame size (IEC)	Preventive measures
$P_N < 100$ kW	No action needed
$P_N \geq 100$ kW OR IEC 315 ≤ Frame size ≤ IEC 355	Insulated non-drive end bearing
$P_N \geq 350$ kW OR IEC 400 ≤ Frame size ≤ IEC 450	Insulated non-drive end bearing AND Common mode filter at the converter

Common mode filters

Common mode filters reduce common mode currents and thus decrease the risk of bearing currents. Common mode filters do not significantly affect the phase or main voltages on the motor terminals. For more information, please see ABB Drives catalogues.

Insulated Bearings

ABB uses bearings with insulated inner or outer races. Hybrid bearings, i.e. bearings with non-conductive ceramic rolling elements, can also be used in special applications.

7. Cabling, grounding and EMC

The use of a frequency converter sets higher demands on the cabling and grounding of the drive system. The motor must be cabled using shielded symmetrical cables and cable glands providing 360° bonding (also called EMC glands, variant code 704). For motors up to 30 kW asymmetrical cables can be used, but shielded cables are always recommended, especially if there are sensitive components in the driven application.

For motors with frame size IEC 280 and upward, additional potential equalization is needed between the motor frame and the machinery, unless the motor and driven machine are installed on a common steel base. When a steel base is used for potential equalization, the high frequency conductivity of the connection must be checked. More information about grounding and cabling for variable speed drives can be found in the manual “Grounding and cabling of the drive system” (Code: 3AFY 61201998 R0125 REV B).

In order to meet EMC requirements, special EMC cable(s) must be used in addition to the correct cable gland mounting, with special, extra earthing pieces. Please refer to the frequency converter manuals.

8. Motor loadability with ABB ACS800 and ACS550 drives

The loadability curves shown in figures 2 and 3 should be considered as guidelines. Please contact ABB for the exact values. These loadability curves can also be used for preliminary dimensioning with other frequency converters, but it must be noted that the harmonic content and control algorithms vary between frequency converters, so the motor temperature rise will also differ.

These guidelines show the maximum continuous load torque, as a function of the frequency (speed), which results in the same temperature rise as operation with the rated sinusoidal supply at nominal frequency and full rated load.

In most cases ABB’s Process performance motors operate with a class B temperature rise. For these motors, dimensioning can be done according to the loadability curve for class B temperature rise, or the motor can be slightly overloaded i.e. dimensioned according to the loadability curve for temperature rise class F.

However, if the ABB catalogue indicates a class F temperature rise with a sinusoidal supply, the dimensioning must be done according to the loadability curve for temperature rise class B.

If the motor is utilized according to the loadability curve for temperature rise class F, it will be necessary to check the temperature rise in other parts of the motor and ensure that the lubrication intervals and grease type are appropriate.

Figure 2. Loadability curves with ACS800 converters with DTC control

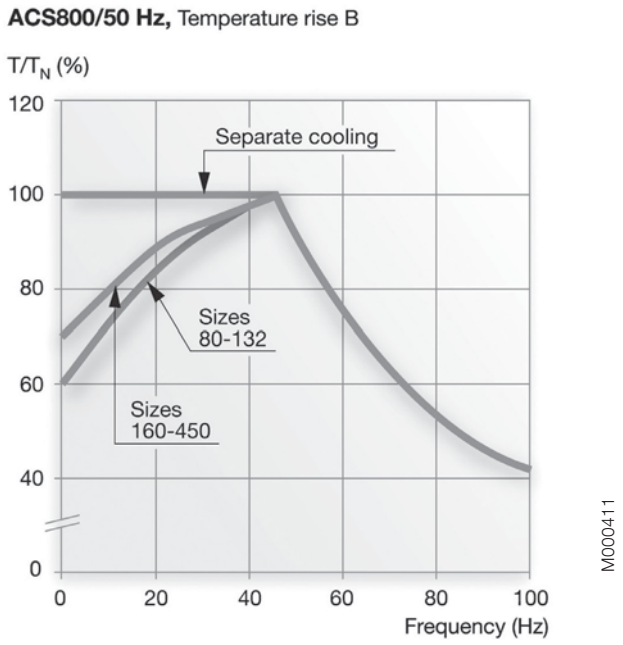

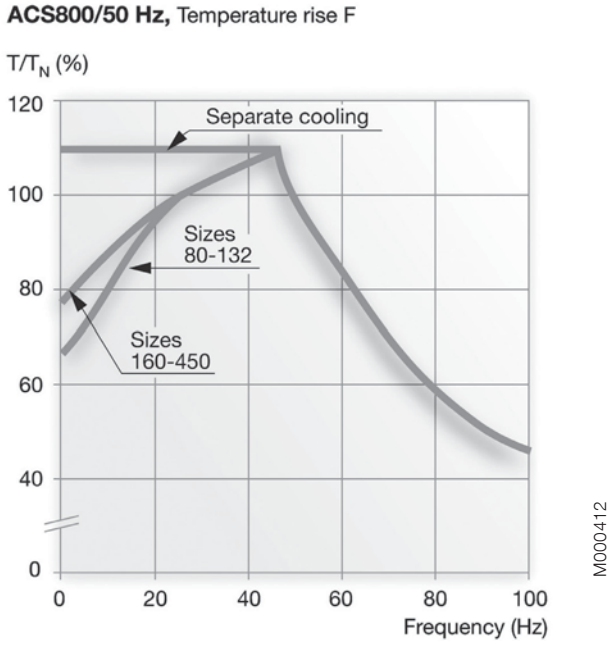

Figure 3. Loadability curves with ACS550 converters with vector control

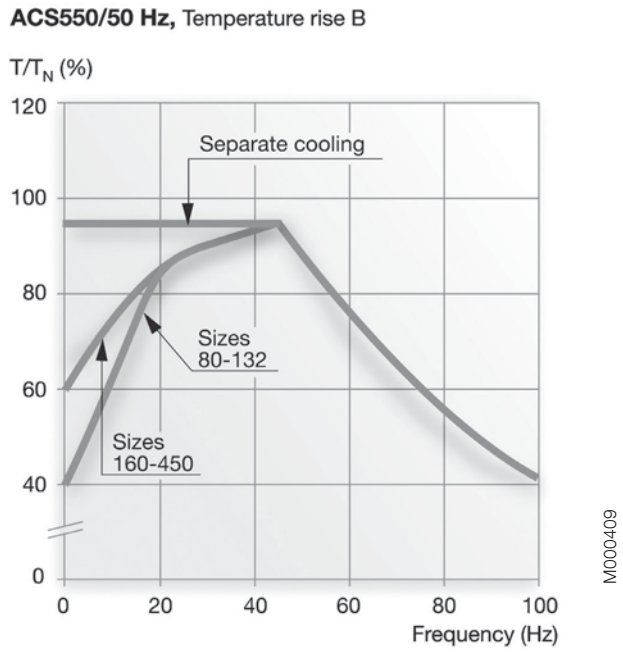

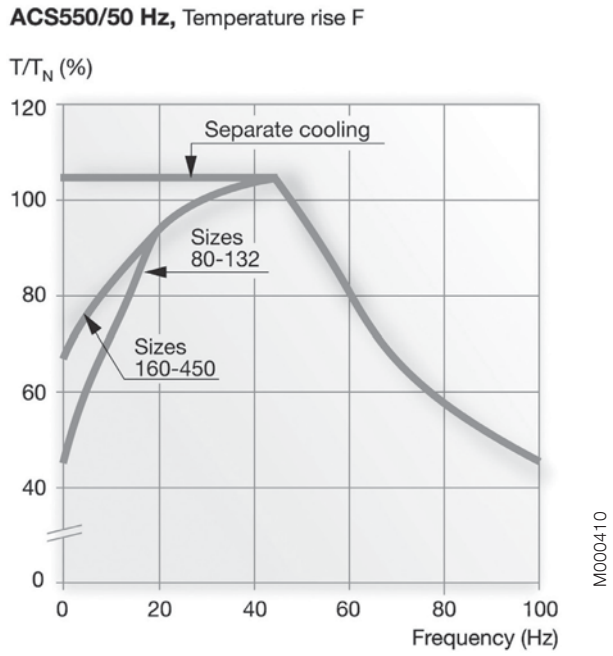

For further information, please contact ABB.

Process performance cast iron motors
Totally enclosed squirrel cage three phase low voltage motors
Sizes 71 to 450, 0.25 to 1000 kW

www.abb.com/motors&generators
> **Low voltage motors**
>> **Process performance motors**

Mechanical design

Stator

The motor frames including feet, bearing housing and terminal box are made of cast iron. Integrally cast feet allow a very rigid mounting and minimal vibration.

Motors can be supplied for foot mounting, flange mounting and combinations of these.

Drain holes

Motors that will be operated in very humid or wet environments, and especially under intermittent duty, should be provided with drain holes. The appropriate IM designation, such as IM 3031, is specified, on the basis of the method of motor mounting.

Motor sizes 160 to 450 are fitted with drain holes and closable plugs. The plugs are open on delivery. When mounting the motors, ensure that the drain holes face downwards.

In the case of vertical mounting, the upper plug must be hammered home completely. In very dusty environments, both plugs should be hammered home.

When mounting arrangement differs from foot mounted IM B3, please mention variant code 066 when ordering.

See variant codes 065 and 066 under the heading “Drain holes”.

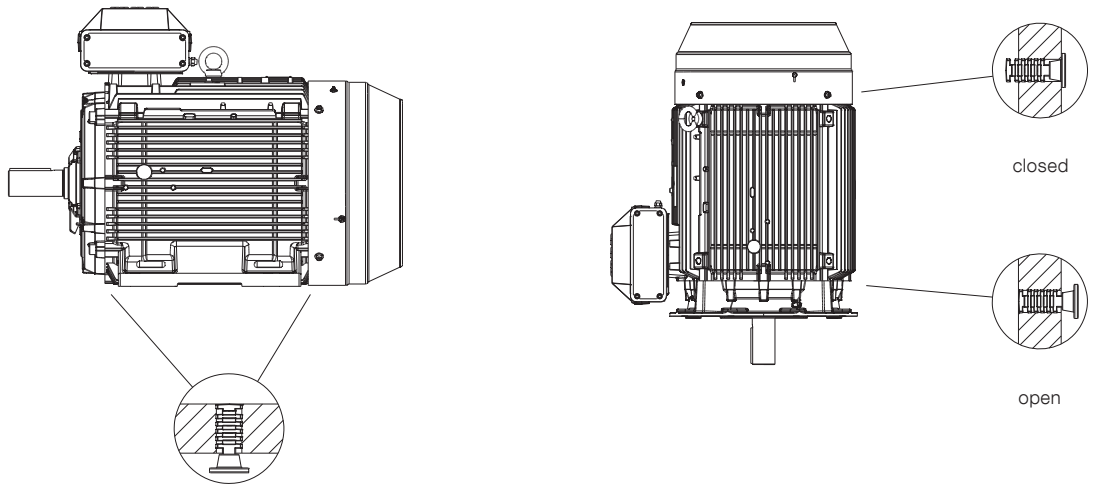

Motor sizes 160-450
As standard with drain holes and closable plugs.

Terminal box standard delivery

Terminal boxes are mounted on the top of the motor at D-end as standard. The terminal box can also be mounted on the left or right side, see ordering information.

The terminal boxes of motor sizes 160 to 355 can be turned 4x90° and in motor size 400-450 rotated 2x180°, to allow cable entry from either side of the motor. For motor sizes 71-132 this is not standard, but possible with a variant code.

Degree of protection of standard terminal box is IP 55.

Motor sizes 160 to 250 come with connection flanges with tapped cable entries, and can be provided with cable glands as an option.

In motor sizes 280 to 450 the terminal box is normally equipped with flanges with cable glands or cable sealing end units. Flange material is siluminum as standard.

If no ordering information on the cable is given, it is assumed to be p.v.c. -insulated non-armoured and termination parts are supplied according to the table on the following pages.

To enable the supply of suitable terminations for the motor, please state cable type, quantity, size and outer diameter when ordering. Non-standard design of terminal boxes; e.g. size, degree of protection, are available as options.

Terminations are suitable for Cu- and Al-cables (Al-cables on request for motor sizes 160 to 250). Cables are connected to the terminals by cable lugs which are not included in the supply.

Please see variant code pages for options.

Standard delivery if nothing else informed

Note: For 500 V and/or side mounted motors please contact ABB!

Motor size	Pole number	Terminal box	Terminal box opening	45° adapter (variant code)	Threaded holes	Cable gland	Cable sealing end unit (variant code)	Cable outer diameter mm	Single core cross-section mm²/ phase	Terminal bolt size 6 x
71	2-8				2 x M16			Ø5-9	2.5	M4
80	2-8				2 x M25			Ø11-16	4	M4
90	2-8				2 x M32			Ø11-16	6	M5
100-132	2-8				2 x M32			Ø14-21	10	M5
160-180	2-8					2xM40	-	2xØ19-27	1x35	M6
200-250	2-8					2xM63	-	2xØ34-45	1x70	M10
280	2-8	210	C	-	2xM63	2xM63	-	2xØ32-49	2x150	M12
315 SM, ML	2-8	370	D	-	2xM63	2xM63	-	2xØ32-49	2x240	M12
315 LKA, LKB	2-4	370	D	-	2xM63	2xM63	-	2xØ32-49	2x240	M12
315 LKC	2-4	750	E	E-D (294)	-	-	Medium (278)	2xØ48-60	4x240	M12
315 LKA, LKB, LKC	6-8	370	D	-	2xM63	2xM63	-	2xØ32-49	2x240	M12
355 SMA, SMB, SMC	2-4	750	E	E-D (294)	-	-	Medium (278)	2xØ48-60	4x240	M12
355 SMC	6	750	E	E-D (294)	-	-	Medium (278)	2xØ48-60	4x240	M12
355 SMC	8	370	D	-	2xM63	2xM63	-	2xØ32-49	2x240	M12
355 SMA, SMB	6-8	370	D	-	2xM63	2xM63	-	2xØ32-49	2x240	M12
355 ML, LK	2-4	750	E	E-D (294)	-	-	Large (279)	2xØ60-80	4x240	M12
355 ML, LK	6-8	750	E	E-D (294)	-	-	Medium (278)	2xØ48-60	4x240	M12
400 L, LK	2-6	750	E	E-D (294)	-	-	Large (279)	2xØ60-80	4x240	M12
400 L, LK	8	750	E	E-D (294)	-	-	Medium (278)	2xØ48-60	4x240	M12
450	2-4	1200	E	E-2D (295)	-	-	2 x large (279)	4xØ60-80	6x240	M12
450 LA, LB, LC, LD	6-8	750	E	E-D (294)	-	-	Large (279)	2xØ60-80	4x240	M12
Auxiliary cable entries										
160 - 180	2-8				1xM16			Ø5-9		
200 - 250	2-8				1xM16			Ø5-9		
280 - 450	2-8				2xM20			Ø8-14		

Earthings on motor

	Earthing on frame	Earthing in main terminal box
71-112	M4	M4
132	M5	M5
160 - 180	clamp	M6
200 - 250	clamp	M6
280 - 315	M10	2xM10
355 - 400	M10	2xM10
450	M10	4xM12

Examples of terminal boxes and connection parts
Below pictures show a collection of terminal boxes and connection parts.

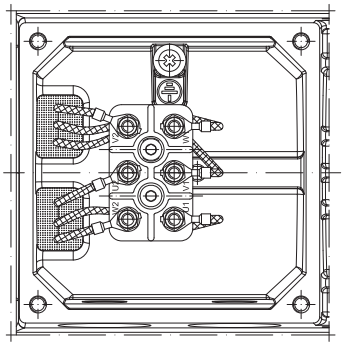

M000419

Terminal board for motor sizes 071-080

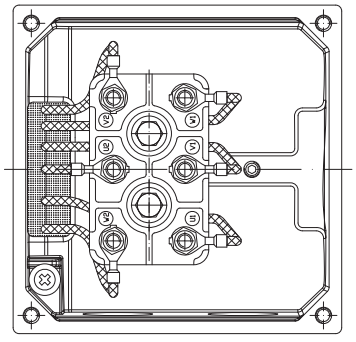

M000420

Terminal board for motor sizes 090-112

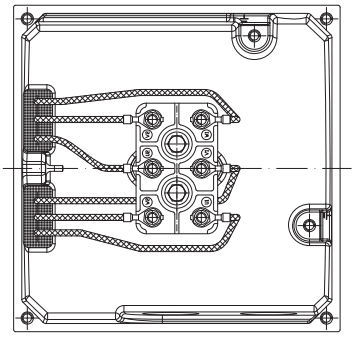

M000421

Terminal board for motor sizes 132

M000422

Fig 1. Terminal box for motor sizes 160-250, connection flanges with tapped cable entries.

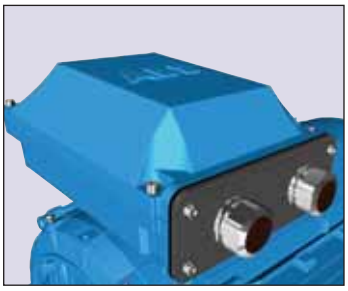

M000423

Fig 2. Terminal box for motor sizes 280-315 with connection flange and cable glands.

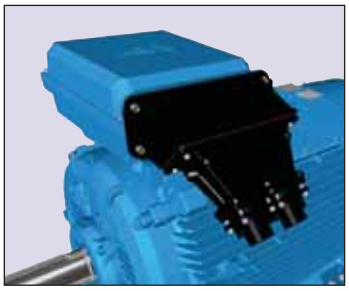

M000424

Fig 3. Terminal box for motor sizes 355-400, with adapter and cable sealing end unit.

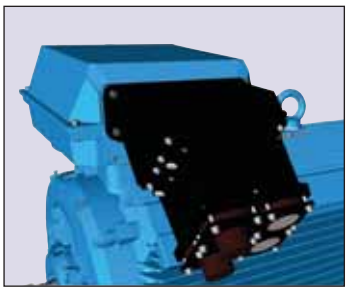

M000425

Fig 4. Terminal box for motor sizes 450, with adapter and cable sealing end unit.

M000426

Fig 5. Terminal board for motor sizes 160-250, connection flanges with tapped cable entries.

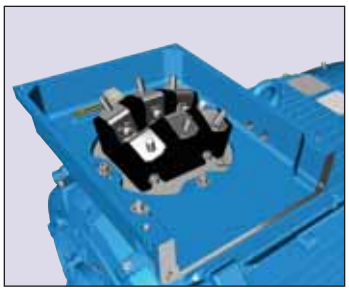

M000427

Fig 6. Terminal board for motor sizes 280-315.

M000428

Fig 7. Terminal board for motor sizes 355-400.

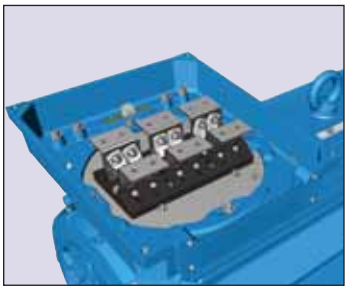

M000429

Fig 8. Terminal board for motor size 450.

Terminal box alternatives

Optional adapters

There is a broad selection of cable termination accessories available to allow termination of one or several cables. The most common ones are explained below, for other options please contact ABB.

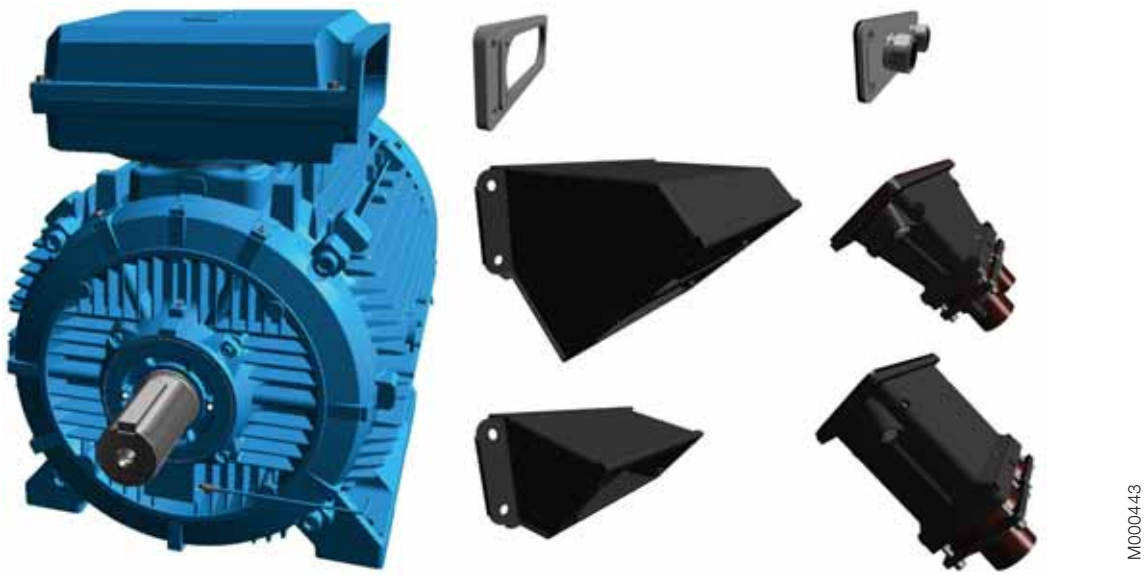

Main terminal box **Adapters** **Cable sealing end units, flange and glands**

How to order?

- Check first that the teminal box can allow mounting of the cable and cores (refer to motor type and terminal box type cross reference page 18).
- If very large cables are used it might be necessary to use a larger terminal box than standard. Select the right cable gland(s) or cable sealing end unit(s) depending on outer diamater of the cable(s)
- Select appropriate adapter and flange and gland(s) or cable sealing end unit.
- Note that turning the terminal box to a non-standard position might limit the use of some adapters.

Ordering example

Motor	200 kW, 4 pole, 400 V 50 Hz
Cables	2 pieces, outer diameter 58 mm, single core cross section 185 mm^2 clamping device needed, cables coming from below
Needed one terminal box for anticondensation heaters and another for temperature detectors, material must be cast iron.	

Motor	M3BP 315 MLA 4-pole, B3
Adapter	D-D - variant code 293
Cable sealing end unit	Variant code 278
Clamping	Variant code 231
Auxiliaries	Variant codes 380, 567, 568

Main terminal box and maximum single core cross section

Only one size larger terminal box can be selected. Please check also the capacity of the cable entry , to make sure that the cables fit.

Standard terminal box	Size of opening	Max single cross section per phase mm^2	One size larger terminal box can be selected if larger single cross section is needed		
			Variant code 019 larger terminal box than standard	Size of opening with Variant code 019	Max single cross section per phase mm^2
210	C	2 x 240	370	D	2 x 300
370	D	2 x 300	750	E	4 x 500
750	E	4 x 500	1200	E	4 x 500
1200	E	4 x 500	NA	NA	NA

Optional adapters

To allow easy termination of cables entering the terminal box from above or below is it recommended to use an angle adapter. These can also be used to allow mounting of several cable sealing end units or gland plates

Adapter	Variant code	Opening towards terminal box	Flange or opening for cable sealing end unit	Material	Notes
M000430	292	C	C	Steel	
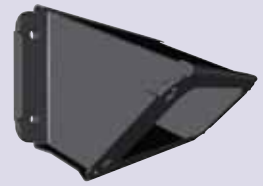 M000431	293	D	D	Steel	
M000432	294	E	D	Steel	Included in std delivery with 750 type terminal box
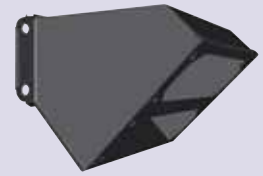 M000433	295	E	2 pcs D	Steel	Included in std delivery with 1200 type terminal box
M000434	296	E	3 pcs D	Steel	Only possible on terminal box 1200
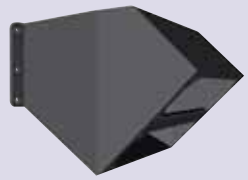 M000435	444	E	2 pcs E	Steel	Only possible on terminal box 1200

Flange, maxium size of glands and material

Flanges are delivered blind or can be drilled and tapped to accomodate glands to suit the cable diameter and amount of glands needed. Standard flange material is siluminum, painted mild steel or stainless steel are available as options.

Size	Examples of maximum size and number of glands, metric		
C	2xM90	3xM50	7xM32
D	4xM90	4xM63	7xM50
E	6xM90	7xM63	9xM50

Related variant codes

729 Aluminum non-drilled flange for cable glands
730 Prepared for NPT cable glands
743 Painted non-drilled flange in steel for cable glands
744 Stainless steel non-drilled flange for cable glands
745 Painted steel flange equipped with brass cable glands
746 Stainless steel cable flange equipped with standard brass cable glands

Cable glands and cable sealing end units

Cable glands

Table below shows the selection of cable gland types and possible cable outer diameter for each size.

Cable gland type	Outer diameter, mm					
	Variant code 745; Painted steel flange equipped with brass cable glands		Variant code 231; Standard cable glands with clamping device		Variant code 704; EMC cable gland	
	Motor sizes 160-250	Motor sizes 280-450	Motor sizes 160-250	Motor sizes 280-450	Motor sizes 160-250	Motor sizes 280-450
M20	8-14	8-14	8-14	8-14	8-14	8-14
M25	10-16	10-16	10-16	10-16	10-16	10-16
M32	14-21	14-21	14-21	14-21	14-21	14-21
M40	18-27	18-27	18-27	18-27	18-27	18-27
M50	26-35	26-35	26-35	26-35	26-35	26-35
M63	32-49	32-49	32-49	32-49	32-49	32-49
M75	NA	46-60	NA	NA	NA	NA
M90	NA	55-70	NA	NA	NA	NA

For armoured and NPT cable glands please contact ABB.

Cable sealing end unit

As an alternative to flanges and cable glands, cable sealing end-units can be used. These allow more space for spreading the cores for easy terminating.

Cable sealing end units have rubber sealed entries for one or two main cables. In addition there are two M20 plugged holes for auxillary cables.

M000437

	Variant code	Opening towards terminal box	Cable outer diameter mm	Cable entry auxiliary cable	Accessories Variant code 704; EMC cable gland	Variant code 231; Standard cable gland with clamping device
M000436	277	C	1 or 2 pcs 48-60 mm *)	2 pcs M20 plugged holes	Optional	Optional
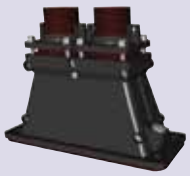 M000437	278	D	1 or 2 pcs 48-60 mm *)	2 pcs M20 plugged holes	Optional	Optional
M000438	279	D	1 or 2 pcs 60-80 mm *)	2 pcs M20 plugged holes	Optional	Optional

*) The cable seal inside the cable sealing end unit can be used so that it is suitable for cable diameters 40-52mm.

Auxiliary terminal box

It's possible to equip the motors from frame size 160 upwards with one or several auxillary terminal boxes for connection of auxillaries like heaters or temperature detectors. The standard auxiliary terminal box is made of aluminum and equipped with M20 glands for entry of the connection cables. As an option cast iron box is also available.

Connection terminals are spring loaded type for quick and easy connection. These are suitable for up to 2,5mm^2 wires. Auxillary terminal boxes are equipped with an earthing terminal. The first auxiliary terminal box is as standard located a RHS at D-end.

Related variant codes:

380	Separate terminal box for temperature detectors, standard material
418	Separate terminal box for auxiliaries, standard material
567	Separate terminal box material: cast iron
568	Separate terminal box for heating elements, standard material
569	Separate terminal box for brake

Small, aluminum auxiliary terminal box (80 x 125 mm, max 12 strips). Earthing size M4

M000439

Large, aluminum auxiliary terminal box (80 x 250 mm, max 30 strips) Earthing M4

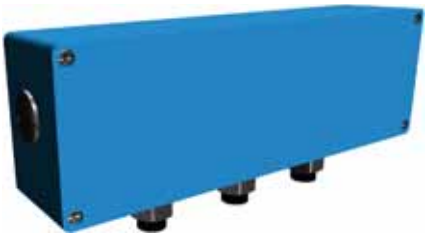

M000440

Cast iron auxiliary terminal box (211 x 188 mm, max 30 strips) Earthing M6

M000441

Standard cable entry size M20. Number of entries depends on the terminal box type and number of selected auxiliaries.

Dimension drawings
Process performance cast iron motors

Terminal boxes, standard design with 6 terminal
For motor sizes 71 to 132 the terminal box is integrated in the frame and the dimensions for the terminal box are in the motor dimensions drawings.

Dimensions for terminal box inlets
Corresponds to motor sizes 160 and above

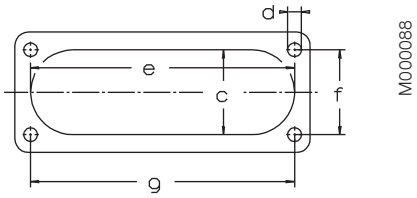

Inlet	c	e	f	g	d
C	62	193	62	193	M8
D	100	300	80	292	M10
E	115	370	100	360	M12

Motor sizes 160 - 250

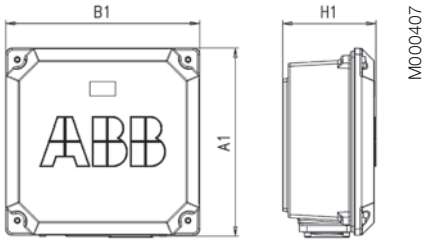

Motor size	A1	B1	H1
160 to 180	257	257	106
200 to 250	300	311	150

Motor sizes 280-315
Top- and side-mounted
Terminal boxes 210, 370

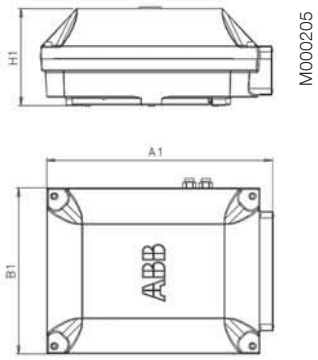

Motor sizes 355-450
Top-mounted
Terminal box 750 + adapter

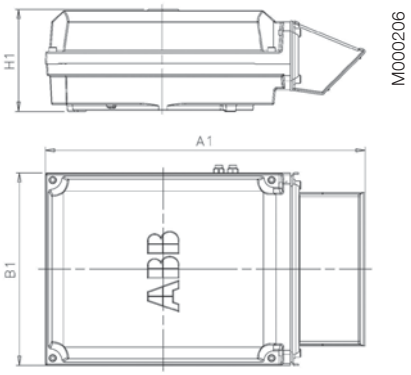

Motor size 450
Top-mounted
Terminal box 1200

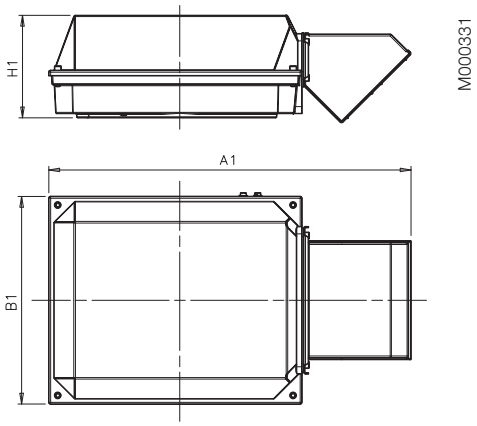

Motor sizes 280 - 400 Terminal box type	A1	B1	H1
210	416	306	177
370	451	347	200
750 top-mounted	686	413	219
750 side-mounted	525	413	219
1200	1250	578	285
	1195	578	285
	1000	578	285

Bearings

The motors are normally fitted with single-row deep groove ball bearings as listed in the table below.

If the bearing at the D-end is replaced with a roller bearing (NU- or NJ-), higher radial forces can be handled. Roller bearings are suitable for belt drive applications.

When there are high axial forces, angular-contact ball bearings should be used. This option is available on request. When a motor with angular-contact ball bearings is ordered, the method of mounting and direction and magnitude of the axial force must be specified. For special bearings, please see the variant codes.

Basic version with deep groove ball bearings

Motor size	Number of poles	Deep groove ball bearings D-end	N-end
71	2-8	6203-2Z/C3	6202-2Z/C3
80	2-8	6204-2Z/C3	6203-2Z/C3
90	2-8	6205-2Z/C3	6204-2Z/C3
100	2-8	6206-2Z/C3	6205-2Z/C3
112	2-8	6206-2Z/C3	6205-2Z/C3
132	2-8	6208-2Z/C3	6208-2Z/C3
160	2-12	6309/C3	6209/C3
180	2-12	6310/C3	6209/C3
200	2-12	6312/C3	6210/C3
225	2-12	6313/C3	6212/C3
250	2-12	6315/C3	6213/C3
280	2	6316/C3	6316/C3
	4-12	6316/C3	6316/C3
315	2	6316/C3	6316/C3
	4-12	6319/C3	6316/C3
355	2	6316M/C3	6316M/C3
	4-12	6322/C3	6316/C3
400	2	6317M/C3	6317M/C3
	4-12	6324/C3	6319/C3
450	2	6317M/C3	6317M/C3
	4-12	6326M/C3	6322/C3

[1] On request

Version with roller bearings, variant code 037

Motor size	Number of poles	Roller bearings, variant code 037 D-end
71	2-8	NU 303
80	2-8	NU 304
90	2-8	NU 305
100	2-8	NU 306
112	2-8	NU 306
132	2-8	NU 308
160	2-12	NU 309 ECP
180	2-12	NU 310 ECP
200	2-12	NU 312 ECP
225	2-12	NU 313 ECP
250	2-12	NU 315 ECP
280	2	[1]
	4-12	NU 316/C3
315	2	[1]
	4-12	NU 319/C3
355	2	[1]
	4-12	NU 322/C3
400	2	[1]
	4-12	NU 324/C3
450	2	[1]
	4-12	NU 326/C3

Version with angular contact ball bearings, variant codes 058 and 059 (Bearing and lubrication)

Motor size	Number of poles	Angular contact ball bearings D-end	N-end
71	2-8	7303 B	7202 B
80	2-8	7304 B	7203 B
90	2-8	7305 B	7204 B
100	2-8	7306 B	7205 B
112	2-8	7306 B	7205 B
132	2-8	7308 B	7208 B

Axially-locked bearings

The outer bearing ring at the D-end can be axially locked with an inner bearing cover. The inner ring is locked by tight tolerance to the shaft.
All motors are equipped as standard with an axially-locked bearing at the D-end.

Transport locking

Motors that have roller bearings or an angular contact ball bearing are fitted with a transport lock before dispatch to prevent damage to the bearings during transport. In case of transport locked bearing, motor sizes 280 to 450 are provided with a warning sign.

Locking may also be fitted in other cases where transport conditions are suspected of being potentially damaging.

Bearing seals

The size and type of seals for sizes 71 to 450 are in accordance with the table below:

Motor size	Number of poles	Standard design Axial seal D-end	N-end	Alternative design Radial seal (DIN 3760) Variant code 072
71	2-12	V-ring 17x32x4	-	17x28x7
80	2-12	V-ring 20x35x4	-	20x40x7
90	2-12	V-ring 25x40x4	-	25x42x7
100	2-12	V-ring 30x47x4,5	-	30x47x7
112	2-12	V-ring 30x47x4,5	-	30x47x7
132	2-12	V-ring 40x57x4,5	V-40A	40x62x7
160	2-12	RB45	V-45A	45x62x8
180	2-12	RB50	RB45	50x68x8
200	2-12	RB60	V-50A	60x80x8
225	2-12	RB65	V-60A	65x85x10
250	2-12	RB75	V-65A	75x95x10

Axial seal:
RB45...75 = Gamma-ring
V50...95 = V-ring

Motor size	Number of poles	Standard design D-end	N-end	Alternative design D-end	N-end
280	2	Labyrinth seal	Axial seal VS80	-	Labyrinth seal
280	4-12	Axial seal VS80	Axial seal VS80	Labyrinth seal Radial seal 80x110x10	Labyrinth seal Radial seal 80x110x10
315	2	Labyrinth seal	Axial seal VS80	-	Labyrinth seal
315SM, ML	4-12	Axial seal VS95	Axial seal VS80	Labyrinth seal Radial seal 95x125x10	Labyrinth seal Radial seal 80x110x10
315LK	4-12	Labyrinth seal	Axial seal VS80	-	Labyrinth seal Radial seal 80x110x10
355	2	Labyrinth seal	Axial seal VS80		Labyrinth seal
355	4-12	Labyrinth seal	Axial seal VS80	-	Labyrinth seal
400	2	Labyrinth seal	Labyrinth seal	-	-
400	4-12	Labyrinth seal	Axial seal VS95	-	Labyrinth seal
450	2	Labyrinth seal	Labyrinth seal	-	-
450	4-12	Labyrinth seal	Labyrinth seal	-	-

Motor sizes 71-132

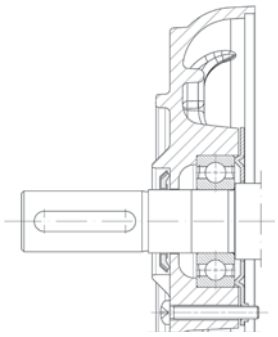

M000278

Motor sizes 160-250

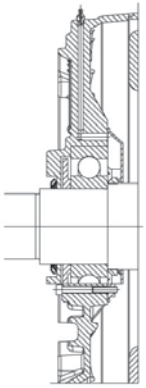

M000279

Motor sizes 280-450

Labyrinth seal

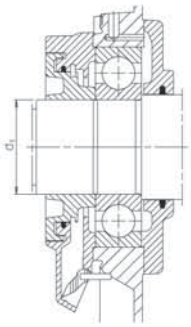

M000280

V-ring

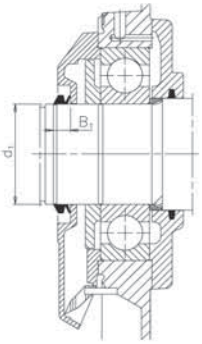

M000281

Radial seal

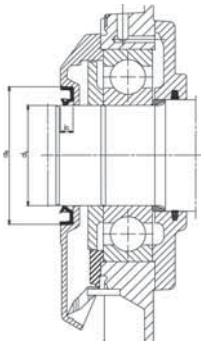

M000282

Bearing life

The nominal life L_{10h} of a bearing is defined according to ISO 281 as the number of operating hours achieved or exceeded by 90% of identical bearings in a large test series under certain specified conditions. 50% of the bearings achieve at least five times this figure.

The calculated bearing life L_{10h} for power transmission by means of a coupling (horizontal machine):

Motor sizes 280 to 450 ≥ 200,000 hours.

Lubrication

On delivery, the motors are ready lubricated with high quality grease. Please find details and instructions in Motor Manual before first start-up. The recommended grease used can be seen from ABB's Low Voltage Motors Manual delivered together with the motor or for frame sizes 160-450 from the lubrication plate fastened to the motor frame. See example of a lubrication plate on page 32.

Motors with permanently greased bearings

Also motors with frame sizes 160-250 can be equipped with permanently greased bearings, which is standard for frame sizes 71-132. Bearings are lubricated with high quality, high temperature grease. Bearing types are mentioned in the rating plates.

The following values can be used as a guide for bearing lifetime, depending on application and load conditions:
4-8 pole motors about 40,000 h
2 pole motors about 20,000 h

Lubrication intervals

ABB follows the L_1-principle in defining lubrication interval. That means that 99% of the motors are sure to make the interval time. The lubrication intervals can also be calculated according to the L_{10}-principle, which are normally doubled compared to L_1-values. Values available from ABB at request.

Lubrication method in cast iron motors

M3BP 71-132	Permanently greased bearings as standard solution
M3BP 71-132	Regreasable bearings as an option
M3BP 160-450	Regreasable bearings as standard solution
M3BP 160-250	Permanently greased bearings as an option

Motors with relubrication nipples

For sizes 280 to 450 the bearing system has been built so that a valve disc can be used to ease the lubrication. Motors are lubricated while running.

Grease outlet opening has closing valves at both ends. This should be opened before greasing and closed 1-2 hours after regreasing. After lubrication close the valves.This ensures that the construction is tight and dust or dirt cannot get inside the bearing.

As an option, a grease collection method can be used.

The table next page gives lubrication intervals according to the L_1-principle for different speeds, ambient temperature of 25°C. The values are valid for horizontal mounted motors (B3), with about 80°C bearing temperature and using high quality grease with lithium complex soap and mineral or PAO-oil.

For more information, see ABB's Low Voltage Motors Manual.

Lubrication intervals according to L_1 principle

Frame size	Amount of grease g/bearing	kW	3600 r/min	3000 r/min	kW	1800 r/min	1500 r/min	kW	1000 r/min	kW	500-900 r/min
Ball bearings											
Lubrication intervals in duty hours											
160	25	≤ 18,5	9000	12000	≤ 15	18000	21500	≤ 11	24000	all	24000
160	25	> 18,5	7500	10000	> 15	15000	18000	> 11	22500	all	24000
180	30	≤ 22	7000	9000	≤ 22	15500	18500	≤ 15	24000	all	24000
180	30	> 22	6000	8500	> 22	14000	17000	> 15	21000	all	24000
200	40	≤ 37	5500	8000	≤ 30	14500	17500	≤ 22	23000	all	24000
200	40	> 37	3000	5500	> 30	10000	12000	> 22	16000	all	20000
225	50	≤ 45	4000	6500	≤ 45	13000	16500	≤ 30	22000	all	24000
225	50	> 45	1500	2500	> 45	5000	6000	> 30	8000	all	10000
250	60	≤ 55	2500	4000	≤ 55	9000	11500	≤ 37	15000	all	18000
250	60	> 55	1000	1500	> 55	3500	4500	> 37	6000	all	7000
280	60	all	2000	3500	-	-	-	-	-	-	-
280	60	-	-	-	all	8000	10500	all	14000	all	17000
280	35	all	1900	3200		-	-		-		-
280	40		-	-	all	7800	9600	all	13900	all	15000
315	35	all	1900	3200		-	-		-		-
315	55		-	-	all	5900	7600	all	11800	all	12900
355	35	all	1900	3200		-	-		-		-
355	70		-	-	all	4000	5600	all	9600	all	10700
400	40	all	1500	2700		-			-	-	-
400	85		-	-	all	3200	4700	all	8600	all	9700
450	40	all	1500	2700		-	-		-		-
450	95		-	-	all	2500	3900	all	7700	all	8700

Frame size	Amount of grease g/bearing	kW	3600 r/min	3000 r/min	kW	1800 r/min	1500 r/min	kW	1000 r/min	kW	500-900 r/min
Roller bearings											
Lubrication intervals in duty hours											
160	25	≤ 18,5	4500	6000	≤ 15	9000	10500	≤ 11	12000	all	12000
160	25	> 18,5	3500	5000	> 15	7500	9000	> 11	11000	all	12000
180	30	≤ 22	3500	4500	≤ 22	7500	9000	≤ 15	12000	all	12000
180	30	> 22	3000	4000	> 22	7000	8500	> 15	10500	all	12000
200	40	≤ 37	2750	4000	≤ 30	7000	8500	≤ 22	11500	all	12000
200	40	> 37	1500	2500	> 30	5000	6000	> 22	8000	all	10000
225	50	≤ 45	2000	3000	≤ 45	6500	8000	≤ 30	11000	all	12000
225	50	> 45	750	1250	> 45	2500	3000	> 30	4000	all	5000
250	60	≤ 55	1000	2000	≤ 55	4500	5500	≤ 37	7500	all	9000
250	60	> 55	500	750	> 55	1500	2000	> 37	3000	all	3500
280	60	all	1000	1750	-	-	-	-	-	-	-
280	70	-	-	-	all	4000	5250	all	7000	all	8500
280	35	all	900	1600		-	-		-		-
280	40		-	-	all	4000	5300	all	7000	all	8500
315	35	all	900	1600		-	-		-		-
315	55		-	-	all	2900	3800	all	5900	all	6500
355	35	all	900	1600		-	-		-		-
355	70		-	-	all	2000	2800	all	4800	all	5400
400	40	all	-	1300		-	-		-		-
400	85		-	-	all	1600	2400	all	4300	all	4800
450	40	all	-	1300		-	-		-		-
450	95		-	-	all	1300	2000	all	3800	all	4400

Pulley diameter

When the desired bearing life has been determined, the minimum permissible pulley diameter can be calculated using FR, as follows:

$$D = \frac{1.9 \cdot 10^7 \cdot K \cdot P}{n \cdot F_R}$$

where:

D = diameter of pulley, mm
P = power requirement, kW
n = motor speed, r/min
K = belt tension factor, dependent on belt type and type of duty. A common value for V-belts is 2.5.
FR = permissible radial force

Permissible loadings on shaft

The tables give the permissible radial forces in Newtons, assuming zero axial force, ambient temperature of 25°C. The values are based on normal conditions at 50 Hz and calculated bearing lives for motor sizes 71 to 450 of 20,000 and 40,000 hours.

Motors are foot-mounted IM B3 version with force directed sideways. In some cases the strength of the shaft affects the permissible forces. At 60 Hz the values must be reduced by 10%. For two-speed motors, the values must be based on the higher speed.

Permissible loads of simultaneous radial and axial forces will be supplied on request.

If the radial force is applied between points X_0 and X_{max}, the permissible force F_R can be calculated from the following formula:

$$F_R = F_{X0} - \frac{X}{E}(F_{X0} - F_{Xmax})$$

E = length of shaft extension in basic version

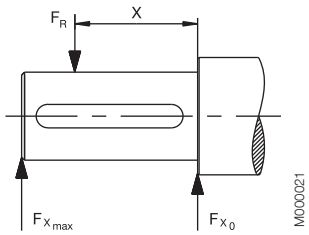

Permissible radial forces
Motor sizes 71 to 132

Motor size	Poles	Length of shaft extension E (mm)	Ball bearings 25,000 hours F_{X0} (N)	F_{Xmax}(N)	40,000 hours F_{X0} (N)	F_{Xmax}(N)
71	2	30	815	740	720	615
	4	30	815	740	720	615
	6	30	815	740	720	615
	8	30	815	740	720	615
80	2	40	1120	970	950	740
	4	40	1120	970	950	740
	6	40	1120	970	950	740
	8	40	1120	970	950	740
90	2	50	1210	1050	1020	900
	4	50	1210	1050	1020	900
	6	50	1210	1050	1020	900
	8	50	1210	1050	1020	900
100	2	60	2280	1800	1930	1520
	4	60	2280	1800	1930	1520
	6	60	2280	1800	1930	1520
	8	60	2280	1800	1930	1520
112	2	60	2280	1800	1930	1520
	4	60	2280	1800	1930	1520
	6	60	2280	1800	1930	1520
	8	60	2280	1800	1930	1520
132	2	80	2600	2100	2300	1900
	4	80	2600	2100	2300	1900
	6	80	2600	2100	2300	1900
	8	80	2600	2100	2300	1900

Motor sizes 160 to 450

Motor size	Poles	Length of shaft extension E (mm)	Ball bearings 20,000 hours F_{X0} (N)	Ball bearings 20,000 hours F_{Xmax} (N)	Ball bearings 40,000 hours F_{X0} (N)	Ball bearings 40,000 hours F_{Xmax} (N)	Roller bearings 20,000 hours F_{X0} (N)	Roller bearings 20,000 hours F_{Xmax} (N)	Roller bearings 40,000 hours F_{X0} (N)	Roller bearings 40,000 hours F_{Xmax} (N)
160 MLA	2	110	3540	2740	2955	2285	7100	4300	6140	4300
	4	110	4000	3100	3325	2570	8000	4300	6870	4300
	6	110	4170	3200	3440	2655	8600	4300	7270	4300
	8	110	4600	3585	3855	2985	9300	4300	7955	4300
160 MLB	2	110	3540	2740	2955	2270	7085	4300	6070	4300
	4	110	4085	3300	3370	2725	8300	4300	7055	4300
	6	110	4100	3355	3400	2755	8600	4300	7300	4300
	8	110	4200	3270	3455	2670	9000	4300	7570	4300
160 MLC	2	110	3400	2600	2855	2200	6800	4300	5885	4300
	4	110	3700	3000	3070	2485	7800	4300	6640	4300
	6	110	3600	2900	2870	2325	8000	4300	6700	4300
	8	110	4170	3370	3370	2725	9000	4300	7585	4300
160 MLD	2	110	3585	2900	3000	2440	7100	4300	6140	4300
	4	110	3400	2755	2755	2240	7600	4300	6370	4300
160 MLE	2	110	3185	2570	2640	2140	6785	4300	5770	4300
180 MLA	2	110	4100	3385	3455	2825	8125	5500	7025	5500
	4	110	4270	3485	3525	2885	8600	5500	7300	5500
	6	110	4700	3800	3855	3155	9400	5500	7900	5500
	8	110	4785	3900	3870	3170	9800	5500	8255	5500
180 MLB	2	110	4170	3400	3470	2825	7900	5500	6770	5500
	4	110	4185	3400	3440	2810	8500	5500	7200	5500
	6	110	4370	3570	3525	2885	9000	5500	7600	5500
180 MLC	4	110	3700	3055	3010	2470	7900	5500	6655	5440
200 MLA	2	110	5600	4685	4700	3925	10900	9100	9470	7900
	4	110	6285	5200	5240	4370	12500	9550	10700	8900
	6	110	6800	5700	5700	4770	13600	9550	11670	9550
	8	110	6800	5700	5600	4685	14100	9550	12000	9550
200 MLB	2	110	5670	4700	4700	3925	11000	9200	9500	7900
	4	110	5700	4700	4700	3925	12000	9550	10185	8500
	6	110	6400	5370	5300	4425	13200	9550	11200	9385
200 MLC	2	110	5000	4185	4185	3500	10400	8700	8900	7455
	4	110	5400	4500	4425	3685	11600	9550	9800	8200
	6	110	5800	4885	4740	3955	12500	9550	10600	8800
200 MLD	2	110	4985	4170	4170	3485	10400	8700	8900	7400
225 SMA	2	110	6400	5400	5355	4500	13300	10700	11500	9700
	4	140	7300	5900	6155	4970	15400	10250	13200	10250
	6	140	7600	6200	6370	5140	16400	10250	14000	10250
	8	140	8500	6900	7100	5725	17900	10250	15300	10250
225 SMB	2	110	6100	5185	5155	4340	13000	10700	11200	9455
	4	140	7085	5700	5885	4755	15100	10250	12900	10250
	6	140	7100	5700	5840	4700	16000	10250	13500	10250
	8	140	8000	6485	6600	5340	17300	10250	14700	10250
225 SMC	2	110	5600	4700	4685	3940	12600	10600	10770	9070
	4	140	6400	5200	5300	4285	14500	10250	12385	10000
225 SMD	2	110	5500	4640	4600	3880	12420	10460	10640	8960
	4	140	5800	4700	4725	3800	13500	10250	11400	9270
250 SMA	2	140	7700	6285	6500	5285	17100	10900	14900	10900
	4	140	8700	7000	7300	5900	19800	13800	17000	13785
	6	140	9400	7600	7800	6355	21600	13800	18400	13800
	8	140	9600	7800	7900	6400	22700	13800	19300	13800
250 SMB	2	140	7100	5800	6000	4885	16700	10900	14400	10900
	4	140	7800	6300	6470	5240	18900	13800	16200	13100
	6	140	8900	7200	7355	5955	21200	13800	18000	13800
250 SMC	2	140	6800	5500	5670	4600	16300	10900	14000	10900
	4	140	7400	6000	6055	4900	18100	13800	15400	12485
	6	140	8200	6600	6670	5400	20300	13800	17200	13800
280 SM_	2	140	7300	6000	5800	4900	20400	6000	16500	6000
	4	140	9200	7800	7300	6200	25100	9200	20300	9200
	6	140	10600	8900	8400	7000	28300	9200	23000	9200
	8	140	11700	9200	9200	7800	30900	9200	25100	9200
315 SM_	2	140	7300	6000	5800	4950	20300	6000	16500	6000
	4	170	11400	9400	9000	7450	32500	9600	26600	9600
	6	170	13000	9600	10300	8500	37000	9600	30000	9600
	8	170	14400	9600	11400	9400	40300	9600	32700	9600

Motor sizes 160 to 450

Motor size	Poles	Length of shaft extension E (mm)	Ball bearings 20,000 hours F_{X0} (N)	Ball bearings 20,000 hours F_{Xmax}(N)	Ball bearings 40,000 hours F_{X0} (N)	Ball bearings 40,000 hours F_{Xmax}(N)	Roller bearings 20,000 hours F_{X0} (N)	Roller bearings 20,000 hours F_{Xmax}(N)	Roller bearings 40,000 hours F_{X0} (N)	Roller bearings 40,000 hours F_{Xmax}(N)
315 ML_	2	140	7400	6400	5850	5050	20600	5850	16700	5850
	4	170	11500	9700	9100	7650	32700	13600	26500	13600
	6	170	13200	11100	10400	8800	36900	13600	29900	13600
	8	170	14500	12200	11500	9700	40200	13600	32600	13600
315 LK__	2	140	7400	6550	5800	5150	20800	5550	16800	5550
	4	170	11500	10000	9100	7850	33100	13350	26800	13350
	6	170	13200	11400	10450	9050	37300	13350	30300	13350
	8	170	14600	12600	11550	10000	40800	13350	33100	13350
355 SM_	2	140	7350	6450	5750	5050	20600	7200	16700	7200
	4	210	15200	12600	12000	9950	45500	14000	36900	14000
	6	210	17500	14000	13800	11400	51400	14000	41700	14000
	8	210	19300	14000	15250	12600	56000	14000	45500	14000
355 ML_	2	140	7350	6550	5750	5100	20800	6750	16800	6750
	4	210	15300	12900	12000	10100	45900	13600	37200	13600
	6	210	17600	13600	13900	11600	51500	13600	42100	13600
	8	210	19400	13600	15300	12900	56000	13600	45900	13600
355 LK_	2	140	7350	6650	5650	5100	21000	6550	17000	6550
	4	210	15200	13000	11850	10200	46000	13000	37300	13000
	6	210	17500	13000	13700	11900	52000	13000	42000	13000
	8	210	19400	13000	15200	13000	56500	13000	46000	13000
400 L_	2	170	7650	6850	4400	3900	23900	9050	19350	9050
	4	210	15600	13550	12150	10550	52500	16000	43300	16000
	6	210	17800	15450	13850	12000	60000	16000	48800	16000
	8	210	19700	16000	15350	13350	65700	16000	53200	16000
400 LK_	2	170	7650	6850	4400	3900	23900	9050	19350	9050
	4	210	15600	11500	12150	10550	52500	11500	43300	11500
	6	210	17800	11500	13850	11500	60000	11500	48800	11500
	8	210	19700	11500	15350	11500	65700	11500	53200	11500
450 L_	2	170	7400	6700	3500	3300	24000	7500	19000	7500
	4	210	17000	15200	13000	11600	62000	25000	50000	25000
	6	210	19000	17000	14000	13000	70000	24000	56000	24000
	8	210	21300	19000	16500	14600	76000	23000	62000	23000

Permissible axial forces

The following tables give the permissible axial forces in Newton, assuming zero radial force, ambient temperature 25°C. The values are based on normal conditions at 50 Hz with standard bearings and calculated bearing lives of 20,000 and 40,000 hours. At 60 Hz the values are to be reduced by 10%. For two-speed motors, the values are to be based on the higher speed. The permissible loads of simultaneous radial and axial forces will be supplied on request. Given axial forces F_{AD}, assumes D-bearing locked by means of locking ring.

Mounting arrangement IM B3

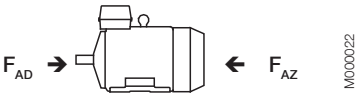

Motor size	20,000 hours 2-pole FAD N	FAZ N	4-pole FAD N	FAZ N	6-pole FAD N	FAZ N	8-pole FAD N	FAZ N	40,000 hours 2-pole FAD N	FAZ N	4-pole FAD N	FAZ N	6-pole FAD N	FAZ N	8-pole FAD N	FAZ N
71	810	420	1015	625	1155	765	1280	890	670	280	820	430	925	535	1015	625
80	1050	610	1320	875	1520	1080	1690	1250	845	410	1055	610	1200	775	1319	880
90	1150	630	1520	845	1650	1130	1830	1315	935	415	1230	550	1305	785	1445	925
100	1650	1000	2230	1580	2650	2000	3000	2355	1210	560	1645	995	1970	1320	2230	1580
112	1645	995	2220	1575	2645	1995	2995	2345	1200	550	1640	990	1965	1315	2225	1575
132	2300	1520	2905	2125	3380	2600	3750	2970	1820	1040	2275	1495	2640	1865	2920	2140
160 MLA	2850	2850	3450	3450	3690	3690	4155	4155	2325	2325	2775	2775	2970	2970	3315	3315
160 MLB	2850	2850	3435	3435	3600	3600	3750	3750	2325	2325	2760	2760	2880	2880	2970	2970
160 MLC	2775	2775	3150	3150	3135	3135	3675	3675	2280	2280	2535	2535	2490	2490	2910	2910
160 MLD	2865	2865	2900	2900	-	-	-	-	2330	2330	2320	2320	-	-	-	-
160 MLE	2500	2500	-	-	-	-	-	-	2025	2025	-	-	-	-	-	-
180 MLA	3300	3300	3600	3600	4140	4140	4220	4220	2700	2700	2920	2920	3320	3320	3360	3360
180 MLB	3340	3340	3580	3580	3800	3800	-	-	2725	2725	2900	2900	3040	3040	-	-
180 MLC	-	-	3220	3220	-	-	-	-	-	-	2560	2560	-	-	-	-
200 MLA	4460	4460	5000	5260	5000	5860	5000	5880	3640	3640	4260	4260	4720	4720	4700	4700
200 MLB	4440	4440	4720	4720	5000	5480	-	-	3620	3620	3840	3840	4420	4420	-	-
200 MLC	3940	3940	4480	4480	4980	4980	-	-	3180	3180	3620	3620	3980	3980	-	-
200 MLD	3940	3940	-	-	-	-	-	-	3200	3200	-	-	-	-	-	-
225 SMA	4980	4980	5000	6080	5000	6520	5000	7420	4060	4060	4920	4920	5000	5260	5000	5960
225 SMB	4860	4860	5000	5880	5000	6020	5000	6940	3960	3960	4780	4780	4840	4840	5000	5560
225 SMC	4380	4380	5000	5240	-	-	-	-	3540	3540	4260	4260	-	-	-	-
225 SMD	4320	4320	4800	4800	-	-	-	-	3480	3480	3820	3820	-	-	-	-
250 SMA	6000	6080	6000	7140	6000	7880	6000	8200	4920	4920	5820	5820	6000	6380	6000	6600
250 SMB	5620	5620	6000	6320	6000	7480	-	-	4540	4540	5100	5100	6000	6040	-	-
250 SMC	5260	5260	5960	5960	6000	6860	-	-	4220	4220	4760	4760	5520	5520	-	-
280 SM_	6200	4250	8000	6000	7250	9250	10300	8300	4900	2900	6250	4250	7150	5150	7950	5950
315 SM_	6180	4200	9400	7400	10900	8900	12000	10000	4850	2850	7250	5250	8350	6350	9200	7000
315 ML_	6050	4050	9250	7250	10650	8650	11500	9900	4750	2750	7100	5100	8100	6100	8900	6800
315 LK__	6000	3950	9100	7150	10500	8500	11750	9750	4650	2650	7000	5000	7950	5950	8900	6900
355 SM_	3050	6850	8600	12400	10550	14350	12200	16000	1750	5550	5900	9700	7300	11100	8550	12350
355 ML_	2900	6700	8360	12150	10100	13900	12000	15800	1600	5400	5650	9450	6900	10700	7300	11000
355 LK_	2650	6450	8200	12000	9900	13700	11450	15250	1350	5150	5450	9250	6700	10500	7800	11600
400 L, LK_	2150	7150	7100	13100	8850	14850	10450	16450	1)	5800	4300	10300	5500	11500	6750	12750
450 L_	1800	6800	7600	13500	9000	15000	10800	16800	1)	5500	4500	10500	5600	11500	7000	12900

Mounting arrangement IM V1

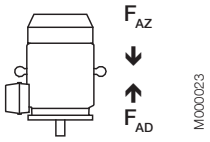

Motor size	20,000 hours 2-pole FAD N	FAZ N	4-pole FAD N	FAZ N	6-pole FAD N	FAZ N	8-pole FAD N	FAZ N	40,000 hours 2-pole FAD N	FAZ N	4-pole FAD N	FAZ N	6-pole FAD N	FAZ N	8-pole FAD N	FAZ N
71	830	410	1040	610	1200	740	1325	865	690	260	845	415	970	505	1059	590
80	1100	585	1400	830	1600	1035	1755	1200	900	375	1125	560	1275	715	1390	840
90	1230	585	1620	780	1770	1060	1930	1250	1010	365	1325	485	1425	715	1540	860
100	1755	910	2370	1465	2795	1890	3145	2235	1315	460	1790	880	2105	1205	2375	1460
112	1770	900	2380	1449	2810	1880	3160	2225	1325	455	1810	865	2130	1189	2390	1445
132	2480	1400	3200	1960	3660	2405	4030	2790	1950	915	2615	1275	2875	1710	3200	1955
160 MLA	3100	2578	3820	3150	4100	3410	4440	3845	2570	2048	3120	2450	3325	2635	3640	3045
160 MLB	3120	2570	3880	3085	4120	3240	4140	3450	2580	2030	3180	2385	3360	2480	3340	2650
160 MLC	3080	2500	3620	2770	3680	2700	4240	3260	2560	1980	2985	2135	3005	2025	3445	2465
160 MLD	3220	2540	3420	2470	-	-	-	-	2665	1985	2820	1870	-	-	-	-
160 MLE	2900	2150	-	-	-	-	-	-	2420	1670	-	-	-	-	-	-
180 MLA	3660	2940	4160	3150	4800	3675	4960	3740	3060	2340	3460	2450	3940	2815	4040	2820
180 MLB	3760	2960	4220	3095	4500	3285	-	-	3125	2320	3500	2375	3700	2485	-	-
180 MLC	-	-	3880	2660	-	-	-	-	-	-	3220	2000	-	-	-	-
200 MLA	5000	3965	5000	4680	5000	5265	5000	5195	4200	3125	5000	3640	5000	4065	5000	3955
200 MLB	5000	3905	5000	4060	5000	4800	-	-	4220	3085	4700	3120	5000	3660	-	-
200 MLC	4600	3385	5000	3775	5000	4165	-	-	3880	2665	4520	2875	5000	3105	-	-
200 MLD	4660	3370	-	-	-	-	-	-	3925	2635	-	-	-	-	-	-
225 SMA	5000	4375	5000	5445	5000	5735	5000	6535	4780	3455	5000	4225	5000	4395	5000	5095
225 SMB	5000	4245	5000	5175	5000	5155	5000	6055	4780	3345	5000	3995	5000	3915	5000	4635
225 SMC	5000	3670	5000	4445	-	-	-	-	4440	2900	5000	3425	-	-	-	-
225 SMD	5000	3590	5000	3895	-	-	-	-	4400	2790	5000	2935	-	-	-	-
250 SMA	6000	5345	6000	6300	6000	6950	6000	7125	5840	4225	6000	4920	6000	5350	6000	5385
250 SMB	6000	4830	6000	5325	6000	6370	-	-	5640	3810	6000	4085	6000	4830	-	-
250 SMC	6000	4395	6000	4900	6000	5575	-	-	5400	3415	6000	3700	6000	4135	-	-
280 SM_	7550	3150	9600	4550	11150	5500	12200	7000	6200	1800	7800	2750	9000	3350	9850	4700
315 SM_	7950	2600	11750	5500	13600	6300	15350	7900	6600	1300	9550	3300	11050	3750	12450	5000
315 ML_	8650	2300	12500	5050	14900	5800	15400	6300	7300		10300	2900	12350	3250	13600	3400
315 LK__	9100	1350	13100	3850	15700	4100	16900	6300	7750		10900	1700	13100	1550	14100	3450
355 SM_	6350	4250	13250	8600	15650	9580	17350	12500	4950	2900	10450	5850	12350	6270	13600	8900
355 ML_	7100	3700	14600	7950	18050	8600	21100	11650	5750	2350	11850	5150	14700	5300	17000	7600
355 LK_	8250	2650	15650	6600	19100	7050	21200	8700	6900	1300	12850	3800	15800	3750	17500	5000
400 L, LK_	8650	2150	16050	6400	18450	6750	20100	8350	7220		13150	3400	15100	3400	16450	4700
450 L_	11500		20000	4400	26000	3700	27800	5500	10000		17700	1200	22200		23700	1350

Rating plates

The rating plates are in table form giving values for speed, current and power factor for three voltages.

The following information must be shown on the motor rating plate according to IEC 60034-30; 2008 and European MEPS (Commission Regulation, EC, No 640/2009):

- Lowest nominal efficiency at 100 %, 75 % and 50 % rated load
- Efficiency level (IE2 or IE3)
- Year of manufacture

Motor sizes 71 to 90

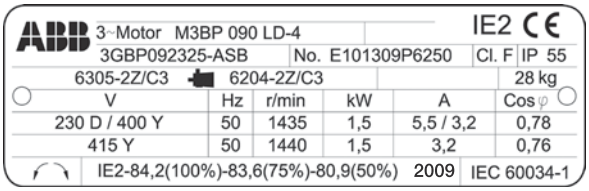

M000283

Motor sizes 100 to 132

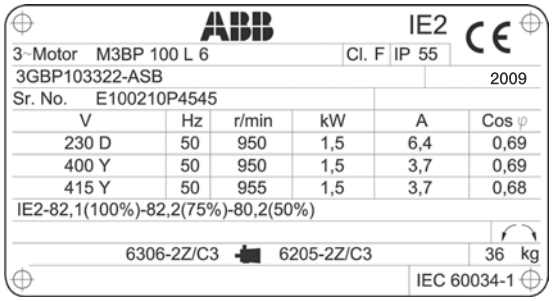

M000442

Motor sizes 160 to 180

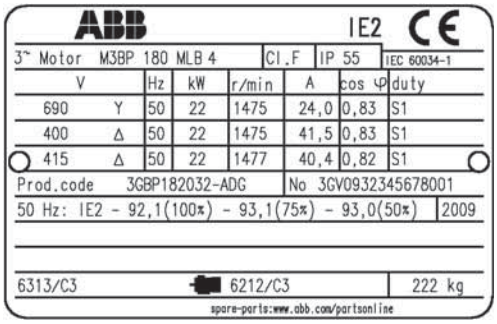

M000402

Motor sizes 200 to 250

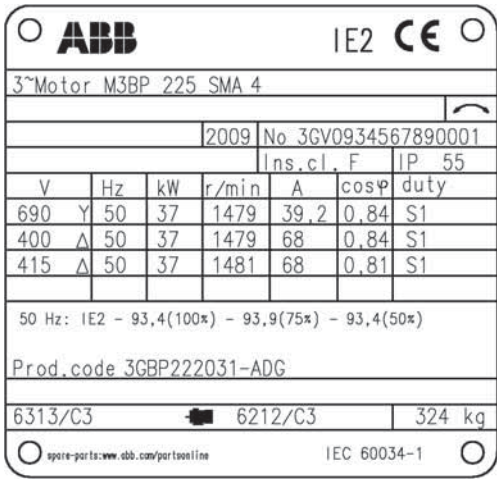

M000403

Motor sizes 280 to 450
Rating plate

M000286

Motor sizes 280 to 450
Lubrication plate

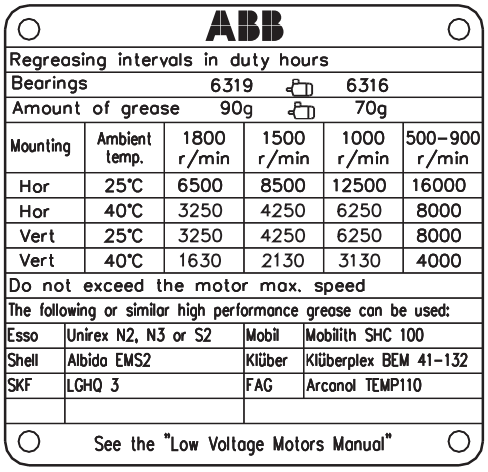

M000287

Ordering information

When placing an order, please state the following minimum data in the order, as in example.

The product code of the motor is composed in accordance with the following example.

Motor type	**M3BP 160 MLC**
Pole number	**2**
Mounting arrangement (IM code)	**IM B3 (IM 1001)**
Rated output	**18.5 kW**
Product code	**3GBP161033-ADG**
Variant codes if needed	

Motor size

A B C D.E.F. G

M3BP 160 MLC 3GBP 161 033 - A D G 003 etc.

1 2 3 4 5 6 7 8 9 10 11 12 13 14

A Motor type
B Motor size
C Product code
D Mounting arrangement code
E Voltage and frequency code
F Generation code
G Variant codes

Explanation of the product code:

Positions 1 to 4
3GBP = Totally enclosed fan cooled squirrel cage motor with cast iron frame

Positions 5 and 6
IEC-frame
71 = 71
80 = 80
90 = 90
10 = 100
12 = 112
13 = 132
16 = 160
18 = 180
20 = 200
22 = 225
25 = 250
28 = 280
31 = 315
35 = 355
40 = 400
45 = 450

Position 7
Speed (Pole pairs)
1 = 2 poles
2 = 4 poles
3 = 6 poles
4 = 8 poles
5 = 10 poles
6 = 12 poles
7 = >12 poles
8 = Two-speed motors for fan drive motors for constant torque
9 = Multi-speed motors, two-speed

Position 8 to 10
Serial number

Position 11
- (dash)

Position 12
Mounting arrangement
A = Foot-mounted, top-mounted terminal box
R = Foot-mounted, terminal box RHS seen from D-end
L = Foot-mounted, terminal box LHS seen from D-end
B = Flange-mounted, large flange
C = Flange-mounted, small flange (sizes 71 to 112)
H = Foot- and flange-mounted, terminal box top-mounted
J = Foot- and flange-mounted, small flange with tapped holes
S = Foot- and flange-mounted, terminal box RHS seen from D-end
T = Foot- and flange-mounted, terminal box LHS seen from D-end
V = Flange-mounted, special flange
F = Foot- and flange-mounted. Special flange

Position 13
Voltage and frequency
Single-speed motors
B 380 VΔ 50 Hz
D 400 VΔ, 415 VΔ, 690 VY 50 Hz
E 500 VΔ 50 Hz
F 500 VY 50 Hz
S 230 VΔ, 400 VY, 415 VY 50 Hz
T 660 VΔ 50 Hz
U 690 VΔ 50 Hz
X Other rated voltage, connection or frequency, 690 V maximum

Two-speed motors
A 220 V 50 Hz
B 380 V 50 Hz
D 400 V 50 Hz
E 500 V 50 Hz
S 230 V 50 Hz
X Other rated voltage, connection or frequency, 690 V maximum

Remark
For voltage code X the variant code 209 non-standard voltage or frequency (special winding) must be ordered.

Position 14
Generation code A, B, C...G...K
The product code must be, if needed, followed by variant codes.

Process performance cast iron motors IE2

Technical data for totally enclosed squirrel cage three phase motors

IP 55 – IC 411 – Insulation class F, temperature rise class B
IE2 efficiency class according to IEC 60034-30; 2008

Output kW	Motor type	Product code	Speed r/min	Efficiency IEC 60034-2-1; 2007 Full load 100%	3/4 load 75%	1/2 load 50%	Power factor cos φ	Current I_N A	I_s / I_N	Torque T_N Nm	T_l / T_N	T_b / T_N	Moment of inertia J = 1/4 GD² kgm²	Weight kg	Sound pressure level L_{PA} dB
3000 r/min = 2-poles			400 V 50 Hz					CENELEC-design							
0.37	M3BP 71 MA	3GBP 071 321-••B	2660	69.2	73.5	73.7	0.80	0.96	3.9	1.32	2.2	2.3	0.00039	11	58
0.55	M3BP 71 MB	3GBP 071 322-••B	2680	73.2	77.3	79.3	0.85	1.27	4.3	1.95	2.4	2.5	0.00051	11	56
0.75	M3BP 80 MB	3GBP 081 322-••B	2895	80.6	79.9	76.2	0.74	1.81	7.7	2.4	4.2	4.2	0.001	16	57
1.1	M3BP 80 MC	3GBP 081 323-••B	2870	81.8	82.4	80.2	0.80	2.4	7.5	3.6	2.7	3.5	0.0012	18	60
1.5	M3BP 90 SLB	3GBP 091 322-••B	2900	82.2	84.1	82.7	0.86	3	7.5	4.9	2.5	2.6	0.00254	24	69
2.2	M3BP 90 SLC	3GBP 091 323-••B	2885	84.7	86.7	85.7	0.87	4.3	6.8	7.2	1.9	2.5	0.0028	25	64
3	M3BP 100 LB	3GBP 101 322-••B	2925	85.2	84.9	82.8	0.86	5.9	9.1	9.7	3.1	3.5	0.00528	36	68
4	M3BP 112 MB	3GBP 111 322-••B	2895	86.1	87.0	86.6	0.86	7.7	8.1	13.1	2.9	3.2	0.00575	37	70
5.5	M3BP 132 SMB	3GBP 131 322-••B	2865	88.0	88.6	88.0	0.86	10.4	7.0	18.3	2.0	2.7	0.01275	68	70
7.5	M3BP 132 SMC	3GBP 131 324-••B	2890	88.6	88.8	87.5	0.84	14.5	7.3	24.7	2.0	3.6	0.01359	70	70
11	M3BP 160 MLA	3GBP 161 031-••G	2938	90.7	91.5	91.1	0.91	19.2	7.5	35.7	2.4	3.1	0.044	127	69
15	M3BP 160 MLB	3GBP 161 036-••G	2934	91.5	92.5	92.2	0.91	26	7.5	48.8	2.5	3.3	0.053	141	69
18.5	M3BP 160 MLC	3GBP 161 037-••G	2932	92.0	93.1	93.1	0.92	31.5	7.5	60.2	2.9	3.4	0.063	170	69
22	M3BP 180 MLA	3GBP 181 031-••G	2952	92.2	92.7	92.2	0.87	39.5	7.7	71.1	2.8	3.3	0.076	190	69
30	M3BP 200 MLA	3GBP 201 035-••G	2956	93.1	93.5	92.9	0.90	51.6	7.7	96.9	2.7	3.1	0.178	283	72
37	M3BP 200 MLB	3GBP 201 036-••G	2959	93.4	93.7	93.0	0.90	63.5	8.2	119	3.0	3.3	0.196	298	72
45	M3BP 225 SMA	3GBP 221 031-••G	2961	93.6	93.9	93.1	0.88	78.8	6.7	145	2.5	2.5	0.244	347	74
55	M3BP 250 SMA	3GBP 251 031-••G	2967	94.1	94.4	93.8	0.88	95.8	6.8	177	2.2	2.7	0.507	405	75
75	M3BP 280 SMA	3GBP 281 210-••G	2978	94.3	94.1	92.8	0.88	130	7.6	240	2.1	3.0	0.8	625	77
90	M3BP 280 SMB	3GBP 281 220-••G	2976	94.6	94.5	93.5	0.90	152	7.4	288	2.1	2.9	0.9	665	77
110	M3BP 315 SMA	3GBP 311 210-••G	2982	94.9	94.4	92.9	0.86	194	7.6	352	2.0	3.0	1.2	880	78
132	M3BP 315 SMB	3GBP 311 220-••G	2982	95.1	94.8	93.6	0.88	227	7.4	422	2.2	3.0	1.4	940	78
160	M3BP 315 SMC	3GBP 311 230-••G	2981	95.4	95.2	94.2	0.89	271	7.5	512	2.3	3.0	1.7	1025	78
200	M3BP 315 MLA	3GBP 311 410-••G	2980	95.7	95.7	94.9	0.90	335	7.7	640	2.6	3.0	2.1	1190	78
250	M3BP 355 SMA	3GBP 351 210-••G	2984	95.7	95.5	94.5	0.89	423	7.7	800	2.1	3.3	3	1600	83
315	M3BP 355 SMB	3GBP 351 220-••G	2980	95.7	95.7	95.1	0.89	533	7.0	1009	2.1	3.0	3.4	1680	83
355	M3BP 355 SMC	3GBP 351 230-••G	2984	95.7	95.7	95.2	0.88	608	7.2	1136	2.2	3.0	3.6	1750	83
400	M3BP 355 MLA	3GBP 351 410-••G	2982	96.9	96.6	95.9	0.88	677	7.1	1280	2.3	2.9	4.1	2000	83
450	M3BP 355 MLB	3GBP 351 420-••G	2983	97.1	97.0	96.4	0.90	743	7.9	1440	2.2	2.9	4.3	2080	83
500	M3BP 355 LKA	3GBP 351 810-••G	2982	96.9	96.9	96.5	0.90	827	7.5	1601	2.0	3.9	4.8	2320	83
560	M3BP 355 LKB	3GBP 351 820-••G	2983	97.0	97.0	96.5	0.90	925	8.0	1792	2.2	4.1	5.2	2460	83
560	M3BP 400 LA	3GBP 401 510-••G	2988	97.2	97.2	96.6	0.89	934	7.8	1789	2.1	3.4	7.9	2950	82
560	M3BP 400 LKA	3GBP 401 810-••G	2988	97.2	97.2	96.6	0.89	934	7.8	1789	2.1	3.4	7.9	2950	82
630	M3BP 400 LB	3GBP 401 520-••G	2987	97.4	97.4	96.9	0.89	1048	7.8	2014	2.2	3.4	8.2	3050	82
630	M3BP 400 LKB	3GBP 401 820-••G	2987	97.4	97.4	96.9	0.89	1048	7.8	2014	2.2	3.4	8.2	3050	82
710	M3BP 400 LC	3GBP 401 530-••G	2987	97.5	97.4	97.0	0.89	1180	7.8	2269	2.6	3.4	9.3	3300	82
710	M3BP 400 LKC	3GBP 401 830-••G	2987	97.5	97.4	97.0	0.89	1180	7.8	2269	2.6	3.4	9.3	3300	82
800 [1]	M3BP 450 LA	3GBP 451 510-••G	2990	97.2	97.1	96.4	0.88	1349	7.8	2554	1.3	3.2	12.5	4000	85
900 [1]	M3BP 450 LB	3GBP 451 520-••G	2990	97.3	97.2	96.6	0.88	1517	7.8	2874	1.5	3.1	14	4200	85
1000 [1]	M3BP 450 LC	3GBP 451 530-••G	0	0.0	0.0	0	0	0	0	0	0.0	0.0	15.5	4400	85

[1] Temperature rise class F
[2] 3dB(A) sound pressure levele reduction with unidirectional fan construction. Direction of rotation must be started when ordering, see variant codes 044 and 045
[3] Undirectional fan construction as standard. Direction of rotation must be started when ordering, see variant codes 044 and 045

The two bullets in the product code indicate choice of mounting arrangements, voltage and frequency code (see ordering information page).

I_s / I_N = Starting current
T_l / T_N = Locked rotor torque
T_b / T_N = Breakdown torque

Process performance cast iron motors IE2

Technical data for totally enclosed squirrel cage three phase motors

IP 55 – IC 411 – Insulation class F, temperature rise class B
IE2 efficiency class according to IEC 60034-30; 2008

Output kW	Motor type	Product code	Speed r/min	Efficiency IEC 60034-2-1; 2007 Full load 100%	3/4 load 75%	1/2 load 50%	Power factor cos φ	Current I_N A	I_s / I_N	Torque T_N Nm	T_l / T_N	T_b / T_N	Moment of inertia J = 1/4 GD² kgm²	Weight kg	Sound pressure level L_{PA} dB
3000 r/min = 2-poles			400 V 50 Hz					High-output design							
22	M3BP 160 MLD	3GBP 161 034-••G	2933	91.7	92.9	92.9	0.91	38	8.1	71.6	3.2	3.6	0.063	170	69
30	M3BP 180 MLB	3GBP 181 032-••G	2950	92.8	93.5	93.3	0.88	53	7.9	97.1	2.8	3.3	0.092	208	69
45	M3BP 200 MLC	3GBP 201 033-••G	2957	93.3	93.8	93.2	0.88	79.1	8.1	145	3.1	3.3	0.196	298	72
55	M3BP 225 SMB	3GBP 221 032-••G	2961	93.9	94.3	93.6	0.88	96	6.5	177	2.4	2.5	0.274	369	74
55 [1]	M3BP 200 MLD	3GBP 201 034-••G	2953	93.8	94.5	94.3	0.89	95	7.8	177	2.9	3.3	0.217	314	72
75	M3BP 250 SMB	3GBP 251 032-••G	2970	94.6	94.9	94.4	0.89	128	7.6	241	2.8	3.1	0.583	451	75
75 [1]	M3BP 225 SMC	3GBP 221 033-••G	2969	94.5	94.7	94.0	0.84	136	7.4	241	3.2	3.1	0.309	396	74
80 [1]	M3BP 225 SMD	3GBP 221 034-••G	2964	94.5	94.9	94.3	0.87	140	7.3	257	3.0	2.8	0.329	410	74
90 [1]	M3BP 250 SMC	3GBP 251 033-••G	2971	95.0	95.3	95.0	0.89	153	7.6	289	2.5	3.1	0.644	487	75
110	M3BP 280 SMC	3GBP 281 230-••G	2978	95.1	95.0	94.2	0.90	185	7.9	352	2.4	3.0	1.15	725	77
250	M3BP 315 LKA	3GBP 311 810-••G	2980	95.7	95.7	95.2	0.89	423	8.1	801	2.8	2.9	2.65	1440	78
315 [1]	M3BP 315 LKC	3GBP 311 830-••G	2981	95.7	95.7	95.4	0.89	533	8.8	1009	3.2	3.2	3.3	1630	78

[1] Temperature rise class F
[2] 3dB(A) sound pressure levele reduction with unidirectional fan construction. Direction of rotation must be started when ordering, see variant codes 044 and 045
[3] Undirectional fan construction as standard. Direction of rotation must be started when ordering, see variant codes 044 and 045

The two bullets in the product code indicate choice of mounting arrangements, voltage and frequency code (see ordering information page).

I_s / I_N = Starting current
T_l / T_N = Locked rotor torque
T_b / T_N = Breakdown torque

Process performance cast iron motors IE2

Technical data for totally enclosed squirrel cage three phase motors

IP 55 – IC 411 – Insulation class F, temperature rise class B
IE2 efficiency class according to IEC 60034-30; 2008

Output kW	Motor type	Product code	Speed r/min	Efficiency IEC 60034-2-1; 2007 Full load 100%	3/4 load 75%	1/2 load 50%	Power factor cos φ	Current I_N A	I_s / I_N	Torque T_N Nm	T_l / T_N	T_b / T_N	Moment of inertia J = 1/4 GD² kgm²	Weight kg	Sound pressure level L_{PA} dB
1500 r/min = 4-poles			400 V 50 Hz					CENELEC-design							
0.25	M3BP 71 MA	3GBP 072 321-••B	1365	68.3	70.8	69.7	0.81	0.65	3.5	1.74	1.9	2.0	0.00074	10	45
0.37	M3BP 71 MB	3GBP 072 322-••B	1380	72.4	74.5	74.6	0.83	0.88	4.0	2.5	1.6	2.1	0.00088	11	45
0.55	M3BP 80 MA	3GBP 082 321-••B	1415	74.5	73.8	70.0	0.73	1.45	5.0	3.7	2.0	2.8	0.00144	15	45
0.75	M3BP 80 MD	3GBP 082 324-••B	1430	81.0	80.7	77.3	0.73	1.83	5.3	5	2.7	3.2	0.00205	17	50
1.1	M3BP 90 SLC	3GBP 092 324-••B	1430	83.7	84.0	82.2	0.78	2.4	6.2	7.3	2.7	3.1	0.00491	26	56
1.1	M3BP 90 SLB	3GBP 092 322-••B	1435	83.6	84.5	83.2	0.80	2.3	6.1	7.3	2.7	3.4	0.0044	25	50
1.5	M3BP 90 SLD	3GBP 092 325-••B	1430	84.3	85.6	84.7	0.83	3	6.3	10	2.7	3.4	0.0053	27	56
2.2	M3BP 100 LC	3GBP 102 323-••B	1450	85.9	85.1	83.4	0.78	4.7	6.4	14.4	2.9	3.6	0.00948	36	56
3	M3BP 100 LD	3GBP 102 324-••B	1450	86.8	87.0	85.4	0.79	6.3	7.7	19.7	2.9	3.4	0.011	38	58
4	M3BP 112 MB	3GBP 112 322-••B	1440	86.8	87.7	87.3	0.81	8.2	7.0	26.5	2.5	2.9	0.0125	44	59
5.5	M3BP 132 SMB	3GBP 132 322-••B	1460	89.0	89.8	88.9	0.80	11.1	5.9	35.9	1.7	2.4	0.03282	70	67
7.5	M3BP 132 SMC	3GBP 132 323-••B	1450	89.3	90.1	90.0	0.81	14.9	5.6	49.3	1.6	2.4	0.03659	73	64
11	M3BP 160 MLA	3GBP 162 031-••G	1466	90.4	91.6	91.3	0.84	20.9	6.8	71.6	2.2	2.8	0.081	135	62
15	M3BP 160 MLB	3GBP 162 032-••G	1470	91.4	92.4	92.2	0.83	28.5	7.1	97.4	2.6	3.0	0.099	165	62
18.5	M3BP 180 MLA	3GBP 182 031-••G	1477	91.9	92.9	92.7	0.84	34.5	7.2	119	2.6	2.9	0.166	205	62
22	M3BP 180 MLB	3GBP 182 032-••G	1475	92.4	93.3	93.2	0.84	40.9	7.3	142	2.6	3.0	0.195	222	62
30	M3BP 200 MLA	3GBP 202 031-••G	1480	93.2	94.0	93.7	0.84	55.3	7.4	193	2.8	3.0	0.309	291	63
37	M3BP 225 SMA	3GBP 222 031-••G	1479	93.4	93.9	93.4	0.84	68	7.1	238	2.6	2.9	0.356	324	66
45	M3BP 225 SMB	3GBP 222 032-••G	1480	93.9	94.3	93.9	0.85	81.3	7.5	290	2.8	3.2	0.44	356	66
55	M3BP 250 SMA	3GBP 252 031-••G	1480	94.4	95.0	94.7	0.85	98.9	7.0	354	2.6	2.9	0.765	414	67
75	M3BP 280 SMA	3GBP 282 210-••G	1484	94.5	94.5	93.9	0.85	134	6.9	482	2.5	2.8	1.25	625	68
90	M3BP 280 SMB	3GBP 282 220-••G	1483	94.7	94.8	94.4	0.86	159	7.2	579	2.5	2.7	1.5	665	68
110	M3BP 315 SMA	3GBP 312 210-••G	1487	95.1	95.1	94.3	0.86	194	7.2	706	2.0	2.5	2.3	900	70
132	M3BP 315 SMB	3GBP 312 220-••G	1487	95.4	95.4	94.7	0.86	232	7.1	847	2.3	2.7	2.6	960	70
160	M3BP 315 SMC	3GBP 312 230-••G	1487	95.6	95.6	95.1	0.85	284	7.2	1027	2.4	2.9	2.9	1000	70
200	M3BP 315 MLA	3GBP 312 410-••G	1486	95.6	95.6	95.3	0.86	351	7.2	1285	2.5	2.9	3.5	1160	70
250	M3BP 355 SMA	3GBP 352 210-••G	1488	95.9	95.9	95.5	0.86	437	7.1	1604	2.3	2.7	5.9	1610	74
315	M3BP 355 SMB	3GBP 352 220-••G	1488	95.9	95.9	95.6	0.86	551	7.3	2021	2.3	2.8	6.9	1780	74
355	M3BP 355 SMC	3GBP 352 230-••G	1487	95.9	95.9	95.7	0.86	621	6.8	2279	2.4	2.7	7.2	1820	78
400	M3BP 355 MLA	3GBP 352 410-••G	1489	96.3	96.3	95.9	0.85	705	6.8	2565	2.3	2.6	8.4	2140	78
450	M3BP 355 MLB	3GBP 352 420-••G	1490	96.8	96.8	96.3	0.86	780	6.9	2884	2.3	2.9	8.4	2140	78
500	M3BP 355 LKA	3GBP 352 810-••G	1490	97.0	97.0	96.5	0.86	865	6.8	3204	2.0	3.0	10	2500	78
560 [1]	M3BP 355 LKB	3GBP 352 820-••G	1490	96.9	96.9	96.5	0.85	981	7.2	3588	2.6	2.7	10.6	2600	78
560	M3BP 400 LA	3GBP 402 510-••G	1491	96.8	96.8	96.3	0.85	982	7.4	3586	2.4	2.8	15	3200	78
560	M3BP 400 LKA	3GBP 402 810-••G	1491	96.8	96.8	96.3	0.85	982	7.4	3586	2.4	2.8	15	3200	78
630	M3BP 400 LB	3GBP 402 520-••G	1491	97.0	97.0	96.5	0.87	1077	7.6	4034	2.2	2.9	16	3300	78
630	M3BP 400 LKB	3GBP 402 820-••G	1491	97.0	97.0	96.5	0.87	1077	7.6	4034	2.2	2.9	16	3300	78
710 [1]	M3BP 400 LC	3GBP 402 530-••G	1491	97.1	97.1	96.6	0.86	1227	7.6	4547	2.4	3.0	17	3400	78
710 [1]	M3BP 400 LKC	3GBP 402 830-••G	1491	97.1	97.1	96.6	0.86	1227	7.6	4547	2.4	3.0	17	3400	78
800	M3BP 450 LA	3GBP 452 510-••G	1492	96.9	96.9	96.2	0.86	1385	7.0	5120	1.3	2.8	23	4050	85
900	M3BP 450 LB	3GBP 452 520-••G	1492	97.1	97.1	96.5	0.86	1555	7.0	5760	1.3	2.8	25	4350	85
1000 [1]	M3BP 450 LC	3GBP 452 530-••G	1491	97.2	97.2	96.7	0.86	1726	6.8	6404	1.3	2.7	30	4700	85

[1] Temperature rise class F

The two bullets in the product code indicate choice of mounting arrangements, voltage and frequency code (see ordering information page).

I_s / I_N = Starting current
T_l / T_N = Locked rotor torque
T_b / T_N = Breakdown torque

Efficiency values are given according to IEC 60034-2-1; 2007.
Please note that the values are not comparable without knowing the testing method.
ABB has calculated the efficiency values according to indirect method, stray load losses (additional losses) determined from measuring.

Process performance cast iron motors IE2

Technical data for totally enclosed squirrel cage three phase motors

IP 55 – IC 411 – Insulation class F, temperature rise class B
IE2 efficiency class according to IEC 60034-30; 2008

Output kW	Motor type	Product code	Speed r/min	Efficiency IEC 60034-2-1; 2007 Full load 100%	3/4 load 75%	1/2 load 50%	Power factor cos φ	Current I_N A	I_s/I_N	Torque T_N Nm	T_l/T_N	T_b/T_N	Moment of inertia J = 1/4 GD² kgm²	Weight kg	Sound pressure level L_{PA} dB
1500 r/min = 4-poles			**400 V 50 Hz**					**High-output design**							
18.5	**M3BP 160 MLC**	3GBP 162 033-••G	1469	91.4	92.5	92.3	0.84	34.7	7.6	120	3.0	3.2	0.11	173	62
22	**M3BP 160 MLD**	3GBP 162 034-••G	1463	91.6	93.0	93.2	0.85	40.7	6.9	143	2.5	2.9	0.125	187	62
30 [1]	**M3BP 180 MLC**	3GBP 182 033-••G	1474	92.3	93.5	93.5	0.83	56.5	7.3	194	2.7	2.9	0.217	235	62
37	**M3BP 200 MLB**	3GBP 202 032-••G	1479	93.4	94.4	94.4	0.85	67.2	7.1	238	2.6	2.9	0.343	307	63
45 [1]	**M3BP 200 MLC**	3GBP 202 033-••G	1479	93.6	94.4	94.2	0.83	83.6	7.5	290	2.9	3.2	0.366	319	63
55	**M3BP 225 SMC**	3GBP 222 033-••G	1478	94.0	94.7	94.5	0.85	99.3	7.4	355	2.9	3.1	0.474	370	66
75 [1]	**M3BP 250 SMB**	3GBP 252 032-••G	1478	94.4	95.1	94.9	0.85	134	7.3	484	2.8	3.1	0.866	450	67
90 [1]	**M3BP 250 SMC**	3GBP 252 033-••G	1478	94.7	95.3	95.0	0.84	163	7.4	581	3.1	3.3	0.941	478	67
110	**M3BP 280 SMC**	3GBP 282 230-••G	1485	95.1	95.2	94.7	0.86	194	7.6	707	3.0	3.0	1.85	725	68
250	**M3BP 315 LKA**	3GBP 312 810-••G	1487	95.7	95.8	95.3	0.86	438	7.4	1605	2.5	2.9	4.4	1410	78
280	**M3BP 315 LKB**	3GBP 312 820-••G	1487	95.8	95.9	95.4	0.87	484	7.6	1798	2.6	3.0	5	1520	78
315	**M3BP 315 LKC**	3GBP 312 830-••G	1488	95.8	95.9	95.3	0.86	551	7.8	2021	2.6	3.2	5.5	1600	78

[1] Temperature rise class F

The two bullets in the product code indicate choice of mounting arrangements, voltage and frequency code (see ordering information page).

I_s / I_N = Starting current
T_l / T_N = Locked rotor torque
T_b / T_N = Breakdown torque

Efficiency values are given according to IEC 60034-2-1; 2007.
Please note that the values are not comparable without knowing the testing method.
ABB has calculated the efficiency values according to indirect method, stray load losses (additional losses) determined from measuring.

Process performance cast iron motors IE2

Technical data for totally enclosed squirrel cage three phase motors

IP 55 – IC 411 – Insulation class F, temperature rise class B
IE2 efficiency class according to IEC 60034-30; 2008

Output kW	Motor type	Product code	Speed r/min	Efficiency IEC 60034-2-1; 2007 Full load 100%	3/4 load 75%	1/2 load 50%	Power factor cos φ	Current I_N A	I_s/I_N	Torque T_N Nm	T_l/T_N	T_b/T_N	Moment of inertia J = 1/4 GD² kgm²	Weight kg	Sound pressure level L_{PA} dB
1000 r/min = 6-poles			400 V 50 Hz					CENELEC-design							
0.18	M3BP 71 MA	3GBP 073 321-••B	900	63.7	63.8	59.0	0.71	0.57	3.1	1.9	2.0	2.1	0.00089	10	42
0.25	M3BP 71 MB	3GBP 073 322-••B	895	67.2	67.2	62.6	0.69	0.77	3.4	2.6	2.2	2.3	0.0011	12	42
0.37	M3BP 80 MA	3GBP 083 321-••B	915	71	71.1	67.0	0.69	1.09	3.6	3.8	1.8	2.2	0.00187	15	47
0.55	M3BP 80 MB	3GBP 083 322-••B	920	73.9	75.0	72.8	0.71	1.51	3.8	5.7	1.8	2.2	0.00239	17	47
0.75	M3BP 90 SLC	3GBP 093 323-••B	960	78.7	77.3	72.5	0.58	2.3	4.5	7.4	2.3	3.1	0.00491	25	44
1.1	M3BP 90 SLE	3GBP 093 324-••B	930	78.2	78.6	76.4	0.66	3	4.0	11.2	1.9	2.3	0.0054	28	44
1.5	M3BP 100 L	3GBP 103 322-••B	950	82.2	82.9	81.6	0.69	3.8	4.0	15	1.5	1.1	0.00873	37	49
2.2	M3BP 112 MB	3GBP 113 322-••B	950	82.5	83.8	81.7	0.69	5.5	4.4	22.1	1.7	2.3	0.0125	44	66
3	M3BP 132 SMB	3GBP 133 321-••B	975	85.3	84.5	81.3	0.63	8	5.5	29.3	1.8	2.9	0.03336	69	57
4	M3BP 132 SMB	3GBP 133 322-••B	960	84.9	85.3	83.9	0.68	10	4.6	39.7	1.5	2.2	0.03336	69	57
5.5	M3BP 132 SMF	3GBP 133 324-••B	965	86.1	86.6	85.5	0.71	12.9	5.1	54.4	2.0	2.3	0.0487	86	57
7.5	M3BP 160 MLA	3GBP 163 031-••G	975	88.6	89.9	89.7	0.79	15.4	7.4	73.4	1.7	3.2	0.087	134	59
11	M3BP 160 MLB	3GBP 163 032-••G	972	89.3	90.7	90.6	0.79	22.5	7.5	108	1.9	2.9	0.114	172	59
15	M3BP 180 MLA	3GBP 183 031-••G	981	90.5	91.4	91.0	0.77	31	6.5	146	1.8	2.8	0.192	221	59
18.5	M3BP 200 MLA	3GBP 203 031-••G	988	91.6	92.3	91.7	0.80	36.4	6.7	178	2.3	2.9	0.382	269	63
22	M3BP 200 MLB	3GBP 203 032-••G	987	92.0	93.0	92.8	0.82	42	6.6	212	2.2	2.8	0.448	291	63
30	M3BP 225 SMA	3GBP 223 031-••G	986	92.7	93.3	92.9	0.83	56.2	7.0	290	2.6	2.9	0.663	349	63
37	M3BP 250 SMA	3GBP 253 031-••G	989	93.1	93.8	93.4	0.82	69.9	6.8	357	2.4	2.7	1.13	395	63
45	M3BP 280 SMA	3GBP 283 210-••G	990	93.4	93.6	93.1	0.84	82.7	7.0	434	2.5	2.5	1.85	605	66
55	M3BP 280 SMB	3GBP 283 220-••G	990	93.8	94.0	93.3	0.84	100	7.0	530	2.7	2.6	2.2	645	66
75	M3BP 315 SMA	3GBP 313 210-••G	992	94.4	94.4	93.5	0.82	139	7.4	721	2.4	2.8	3.2	830	70
90	M3BP 315 SMB	3GBP 313 220-••G	992	94.8	94.8	94.2	0.84	163	7.5	866	2.4	2.8	4.1	930	70
110	M3BP 315 SMC	3GBP 313 230-••G	991	95.0	95.0	94.6	0.83	201	7.4	1059	2.5	2.9	4.9	1000	70
132	M3BP 315 MLA	3GBP 313 410-••G	991	95.3	95.4	94.9	0.83	240	7.5	1271	2.7	3.0	5.8	1150	68
160	M3BP 355 SMA	3GBP 353 210-••G	993	95.4	95.4	94.8	0.83	291	7.0	1538	2.0	2.6	7.9	1520	75
200	M3BP 355 SMB	3GBP 353 220-••G	993	95.7	95.7	95.1	0.84	359	7.2	1923	2.2	2.7	9.7	1680	75
250	M3BP 355 SMC	3GBP 353 230-••G	993	95.7	95.7	95.1	0.83	454	7.4	2404	2.6	2.9	11.3	1820	75
315	M3BP 355 MLB	3GBP 353 420-••G	992	95.7	95.7	95.2	0.83	572	7.0	3032	2.5	2.7	13.5	2180	75
355	M3BP 355 LKA	3GBP 353 810-••G	992	95.7	95.7	95.1	0.83	645	7.6	3417	2.7	2.9	15.5	2500	75
400 [1]	M3BP 355 LKB	3GBP 353 820-••G	992	96.0	96.0	95.5	0.83	724	7.2	3850	2.6	2.6	16.5	2600	75
400	M3BP 400 LA	3GBP 403 510-••G	993	96.2	96.3	95.8	0.82	731	7.1	3846	2.3	2.7	17	2900	76
400	M3BP 400 LKA	3GBP 403 810-••G	993	96.2	96.3	95.8	0.82	731	7.1	3846	2.3	2.7	17	2900	76
450	M3BP 400 LB	3GBP 403 520-••G	994	96.6	96.6	96.1	0.82	819	7.4	4323	2.4	2.8	20.5	3150	76
450	M3BP 400 LKB	3GBP 403 820-••G	994	96.6	96.6	96.1	0.82	819	7.4	4323	2.4	2.8	20.5	3150	76
500	M3BP 400 LC	3GBP 403 530-••G	993	96.6	96.7	96.2	0.83	900	7.2	4808	2.5	2.7	22	3300	76
500	M3BP 400 LKC	3GBP 403 830-••G	993	96.6	96.7	96.2	0.83	900	7.2	4808	2.5	2.7	22	3300	76
560	M3BP 400 LD	3GBP 403 540-••G	993	96.9	96.9	96.4	0.85	981	7.4	5385	2.4	2.8	24	3400	77
560	M3BP 400 LKD	3GBP 403 840-••G	993	96.9	96.9	96.4	0.85	981	7.4	5385	2.4	2.8	24	3400	77
630	M3BP 450 LA	3GBP 453 510-••G	994	96.7	96.8	96.4	0.84	1119	6.5	6052	1.1	2.5	31	4150	81
710	M3BP 450 LB	3GBP 453 520-••G	995	96.9	96.9	96.5	0.85	1244	7.0	6814	1.3	2.5	37	4500	81
800 [1]	M3BP 450 LC	3GBP 453 530-••G	995	96.9	97.0	96.6	0.84	1418	7.2	7677	1.3	2.7	41	4800	81

[1] Temperature rise class F

The two bullets in the product code indicate choice of mounting arrangements, voltage and frequency code (see ordering information page).

I_s / I_N = Starting current
T_l / T_N = Locked rotor torque
T_b / T_N = Breakdown torque

Efficiency values are given according to IEC 60034-2-1; 2007.
Please note that the values are not comparable without knowing the testing method.
ABB has calculated the efficiency values according to indirect method, stray load losses (additional losses) determined from measuring.

Process performance cast iron motors IE2

Technical data for totally enclosed squirrel cage three phase motors

IP 55 – IC 411 – Insulation class F, temperature rise class B
IE2 efficiency class according to IEC 60034-30; 2008

Output kW	Motor type	Product code	Speed r/min	Efficiency IEC 60034-2-1; 2007 Full load 100%	3/4 load 75%	1/2 load 50%	Power factor cos φ	Current I_N A	I_s/I_N	Torque T_N Nm	T_l/T_N	T_b/T_N	Moment of inertia J = 1/4 GD² kgm²	Weight kg	Sound pressure level L_{PA} dB
1000 r/min = 6-poles			**400 V 50 Hz**					**High-output design**							
30 [1]	**M3BP 200 MLC**	3GBP 203 033-••G	985	92.0	93.1	92.9	0.83	56.7	6.9	290	2.3	2.8	0.531	318	63
37	**M3BP 225 SMB**	3GBP 223 034-••G	985	93.1	94.0	94.0	0.83	69.1	6.6	358	2.3	2.6	0.821	393	63
45	**M3BP 250 SMB**	3GBP 253 032-••G	989	93.4	94.1	93.9	0.83	83.7	7.0	434	2.5	2.7	1.369	441	63
45 [1]	**M3BP 225 SMC**	3GBP 223 033-••G	984	92.7	93.9	94.0	0.83	84.4	6.4	436	2.3	2.6	0.821	393	63
55 [1]	**M3BP 250 SMC**	3GBP 253 033-••G	988	93.2	94.1	94.0	0.84	101	7.1	531	2.6	2.8	1.5	468	63
75	**M3BP 280 SMC**	3GBP 283 230-••G	990	94.2	94.5	94.1	0.84	136	7.3	723	2.8	2.7	2.85	725	66
160	**M3BP 315 LKA**	3GBP 313 810-••G	992	95.3	95.3	94.7	0.83	291	7.5	1540	2.6	2.8	7.3	1410	74
180	**M3BP 315 LKB**	3GBP 313 820-••G	992	95.3	95.4	94.8	0.83	328	7.4	1732	2.6	2.8	8.3	1520	74
200	**M3BP 315 LKC**	3GBP 313 830-••G	989	95.4	95.6	95.3	0.85	355	6.8	1931	2.5	2.6	9.2	1600	74

[1] Temperature rise class F

The two bullets in the product code indicate choice of mounting arrangements, voltage and frequency code (see ordering information page).

I_s / I_N = Starting current
T_l / T_N = Locked rotor torque
T_b / T_N = Breakdown torque

Efficiency values are given according to IEC 60034-2-1; 2007.
Please note that the values are not comparable without knowing the testing method.
ABB has calculated the efficiency values according to indirect method, stray load losses (additional losses) determined from measuring.

Process performance cast iron motors
Technical data for totally enclosed squirrel cage three phase motors

IP 55 – IC 411 – Insulation class F, temperature rise class B

Output kW	Motor type	Product code	Speed r/min	Efficiency IEC 60034-2-1; 2007 Full load 100%	3/4 load 75%	1/2 load 50%	Power factor cos φ	Current I_N A	I_s / I_N	Torque T_N Nm	T_l / T_N	T_b / T_N	Moment of inertia J = 1/4 GD² kgm²	Weight kg	Sound pressure level L_{PA} dB
750 r/min = 8-poles			400 V 50 Hz					CENELEC-design							
0.09	M3BP 71 MA	3GBP 074 101-••B	660	49.4	46	38.5	0.59	0.44	2.0	1.3	2.4	2.3	0.00089	11	40
0.12	M3BP 71 MB	3GBP 074 102-••B	670	51.4	47.5	39.9	0.56	0.6	2.1	1.71	2.8	2.4	0.0011	12	43
0.18	M3BP 80 MA	3GBP 084 101-••B	685	63.5	62.0	56.3	0.62	0.65	2.8	2.5	1.6	2.0	0.00187	15	45
0.25	M3BP 80 MB	3GBP 084 102-••B	685	67.1	67.2	63.4	0.63	0.85	2.8	3.4	1.4	1.9	0.00187	17	50
0.37	M3BP 90 SLB	3GBP 094 102-••B	705	66.3	64.0	57.1	0.54	1.49	2.8	5	1.4	2.2	0.00444	24	50
0.55	M3BP 90 SLC	3GBP 094 103-••B	655	61.8	65.6	65.2	0.67	1.91	2.3	8	1.3	1.5	0.00491	25	53
0.75	M3BP 100 LA	3GBP 104 101-••B	710	74.0	73.0	68.2	0.61	2.3	3.6	10	1.8	2.5	0.0072	30	46
1.1	M3BP 100 LB	3GBP 104 102-••B	695	76.0	76.5	74.6	0.66	3.1	3.4	15.1	1.7	2.2	0.00871	30	53
1.5	M3BP 112 M	3GBP 114 101-••B	690	74.4	75.9	74.1	0.70	4.1	3.2	20.7	1.4	1.9	0.0106	39	55
2.2	M3BP 132 SMA	3GBP 134 101-••B	715	79.7	80.8	78.7	0.66	6	3.2	29.3	1.1	1.7	0.03336	70	56
3	M3BP 132 SMB	3GBP 134 102-••B	715	79.9	80.8	79.1	0.64	8.4	3.2	40	1.2	1.8	0.04003	75	58
4	M3BP 160 MLA	3GBP 164 031-••G	728	84.1	85.1	83.7	0.67	10.2	5.4	52.4	1.5	2.6	0.068	120	59
5.5	M3BP 160 MLB	3GBP 164 032-••G	726	84.7	86.0	84.9	0.67	13.9	5.6	72.3	1.4	2.6	0.085	134	59
7.5	M3BP 160 MLC	3GBP 164 033-••G	727	86.1	87.3	86.6	0.65	19.3	4.7	98.5	1.5	2.8	0.132	184	59
11	M3BP 180 MLA	3GBP 184 031-••G	731	86.8	88.4	87.8	0.67	27.3	4.4	143	1.8	2.6	0.214	233	59
15	M3BP 200 MLA	3GBP 204 031-••G	737	90.2	91.3	90.9	0.74	32.4	5.3	194	2.0	2.4	0.45	290	60
18.5	M3BP 225 SMA	3GBP 224 031-••G	739	91.0	92.0	91.5	0.73	40.1	5.2	239	2.0	2.3	0.669	350	63
22	M3BP 225 SMB	3GBP 224 032-••G	738	91.6	92.4	92.0	0.74	46.8	5.5	284	2.0	2.3	0.722	363	63
30	M3BP 250 SMA	3GBP 254 031-••G	742	92.4	92.9	92.3	0.71	66	5.8	386	2.6	2.4	1.404	440	63
37	M3BP 280 SMA	3GBP 284 210-••G	741	92.7	92.7	91.6	0.78	73.8	7.3	476	1.7	3.0	1.85	605	65
45	M3BP 280 SMB	3GBP 284 220-••G	741	93.2	93.2	92.2	0.78	89.3	7.6	579	1.8	3.1	2.2	645	65
55	M3BP 315 SMA	3GBP 314 210-••G	742	93.4	93.5	92.7	0.81	104	7.1	707	1.6	2.7	3.2	830	62
75	M3BP 315 SMB	3GBP 314 220-••G	741	93.7	93.9	93.4	0.82	140	7.1	966	1.7	2.7	4.1	930	62
90	M3BP 315 SMC	3GBP 314 230-••G	741	94.0	94.2	93.6	0.82	168	7.4	1159	1.8	2.7	4.9	1000	64
110	M3BP 315 MLA	3GBP 314 410-••G	740	94.0	94.3	94.0	0.83	203	7.3	1419	1.8	2.7	5.8	1150	72
132	M3BP 355 SMA	3GBP 354 210-••G	744	94.7	94.7	94.0	0.80	251	7.5	1694	1.5	2.6	7.9	1520	69
160	M3BP 355 SMB	3GBP 354 220-••G	744	95.2	95.2	94.5	0.80	303	7.6	2053	1.6	2.6	9.7	1680	69
200	M3BP 355 SMC	3GBP 354 230-••G	743	95.3	95.4	94.8	0.80	378	7.4	2570	1.6	2.6	11.3	1820	69
250	M3BP 355 MLB	3GBP 354 420-••G	743	95.4	95.5	95.0	0.80	472	7.5	3213	1.6	2.7	13.5	2180	72
315 [1]	M3BP 355 LKB	3GBP 354 820-••G	742	95.5	95.6	95.0	0.80	595	7.9	4053	1.7	2.7	16.5	2600	75
315	M3BP 400 LA	3GBP 404 510-••G	744	96.1	96.2	95.8	0.81	584	7.0	4043	1.2	2.6	17	2900	71
315	M3BP 400 LKA	3GBP 404 810-••G	744	96.1	96.2	95.8	0.81	584	7.0	4043	1.2	2.6	17	2900	71
355	M3BP 400 LB	3GBP 404 520-••G	743	96.2	96.3	96.1	0.83	641	6.8	4562	1.2	2.5	21	3200	71
355	M3BP 400 LKB	3GBP 404 820-••G	743	96.2	96.3	96.1	0.83	641	6.8	4562	1.2	2.5	21	3200	71
400	M3BP 400 LC	3GBP 404 530-••G	744	96.3	96.4	96.0	0.82	731	7.4	5134	1.3	2.7	24	3400	71
400	M3BP 400 LKC	3GBP 404 830-••G	744	96.3	96.4	96.0	0.82	731	7.4	5134	1.3	2.7	24	3400	71
450	M3BP 450 LA	3GBP 454 510-••G	744	96.2	96.4	96.2	0.83	813	6.0	5775	1.0	2.5	26	3750	80
500	M3BP 450 LB	3GBP 454 520-••G	744	96.3	96.4	96.2	0.83	902	6.4	6417	1	2.6	29	4000	80
560	M3BP 450 LC	3GBP 454 530-••G	744	96.4	96.5	96.1	0.82	1022	7.0	7187	1.2	2.9	35	4350	80
630 [1]	M3BP 450 LD	3GBP 454 540-••G	745	96.6	96.6	96.2	0.81	1162	7.6	8075	1.3	3.2	41	4800	80
750 r/min = 8-poles			400 V 50 Hz					CENELEC-design							
55	M3BP 280 SMC	3GBP 284 230-••G	741	93.4	93.5	92.8	0.80	106	7.9	708	1.9	3.1	2.85	725	65
132	M3BP 315 LKA	3GBP 314 810-••G	740	94.1	94.4	94.2	0.83	243	7.3	1703	1.8	2.6	7.3	1410	74
150	M3BP 315 LKB	3GBP 314 820-••G	741	94.3	94.6	94.3	0.83	276	7.7	1933	1.9	2.7	8.3	1520	74
160	M3BP 315 LKC	3GBP 314 830-••G	740	94.2	94.6	94.3	0.83	295	7.7	2064	1.9	2.8	9.2	1600	75

[1] Temperature rise class F

The two bullets in the product code indicate choice of mounting arrangements, voltage and frequency code (see ordering information page).

I_s / I_N = Starting current
T_l / T_N = Locked rotor torque
T_b / T_N = Breakdown torque

Efficiency values are given according to IEC 60034-2-1; 2007. Please note that the values are not comparable without knowing the testing method. ABB has calculated the efficiency values according to indirect method, stray load losses (additional losses) determined from measuring.

Process performance cast iron motors
Technical data for totally enclosed squirrel cage three phase motors

IP 55 – IC 411 – Insulation class F, temperature rise class B

Output kW	Motor type	Product code	Speed r/min	Efficiency IEC 60034-2-1; 2007 Full load 100%	3/4 load 75%	1/2 load 50%	Power factor cos φ	Current I_N A	I_s/I_N	Torque T_N Nm	T_l/T_N	T_b/T_N	Moment of inertia J = 1/4 GD² kgm²	Weight kg	Sound pressure level L_{PA} dB
600 r/min = 10-poles			**400 V 50 Hz**					**CENELEC-design**							
37	**M3BP 280 SMB**	3GBP 285 220-••G	593	92.5	92.3	90.9	0.73	79	6.6	595	1.6	3	2.2	645	60
45	**M3BP 280 SMC**	3GBP 285 230-••G	592	93	92.9	91.7	0.75	93.1	6.7	725	1.6	2.8	2.85	725	60
55	**M3BP 315 SMB**	3GBP 315 220-••G	594	93.8	93.8	92.9	0.78	108	6.7	884	1.6	2.7	4.1	930	70
75	**M3BP 315 SMC**	3GBP 315 230-••G	593	93.6	93.7	92.8	0.78	148	6.6	1207	1.5	2.8	4.9	1000	70
90	**M3BP 315 MLA**	3GBP 315 410-••G	593	93.7	93.8	93	0.78	177	6.6	1449	1.7	2.7	5.8	1150	70
110	**M3BP 355 SMA**	3GBP 355 210-••G	595	94.5	94.5	93.6	0.76	221	6.6	1765	1.3	2.5	7.9	1520	73
132	**M3BP 355 SMB**	3GBP 355 220-••G	594	94.8	94.9	94.2	0.79	254	6.6	2122	1.3	2.4	9.7	1680	73
160	**M3BP 355 SMC**	3GBP 355 230-••G	594	94.8	94.9	94.2	0.77	316	6.9	2572	1.4	2.5	11.3	1820	76
200	**M3BP 355 MLB**	3GBP 355 420-••G	594	95	95.1	94.5	0.78	389	6.5	3215	1.4	2.4	13.5	2180	77
250 [1]	**M3BP 355 LKB**	3GBP 355 820-••G	593	95.1	95.3	94.8	0.78	486	6.3	4025	1.4	2.3	16.5	2600	79
250	**M3BP 400 LB**	3GBP 405 520-••G	595	95.3	95.3	94.5	0.74	511	6.2	4012	1.3	2.3	20	3100	79
250	**M3BP 400 LKB**	3GBP 405 820-••G	595	95.3	95.3	94.5	0.74	511	6.2	4012	1.3	2.3	20	3100	79
315	**M3BP 400 LC**	3GBP 405 530-••G	595	95.4	95.4	94.7	0.74	644	6.2	5055	1.3	2.3	24	3400	79
315	**M3BP 400 LKC**	3GBP 405 830-••G	595	95.4	95.4	94.7	0.74	644	6.2	5055	1.3	2.3	24	3400	79
355	**M3BP 450 LA**	3GBP 455 510-••G	596	95.9	95.9	95.2	0.72	742	5.8	5687	1.1	2.2	31	4050	82
400	**M3BP 450 LB**	3GBP 455 520-••G	596	95.9	95.9	95.1	0.72	836	5.7	6408	1	2.1	34	4250	82
450	**M3BP 450 LC**	3GBP 455 530-••G	596	96.1	96.1	95.4	0.73	925	5.8	7210	1	2.1	38	4550	82
500 [1]	**M3BP 450 LD**	3GBP 455 540-••G	596	96.1	96.1	95.4	0.71	1057	5.9	8011	1.1	2.2	42	4800	82
500 r/min = 12-poles			**400 V 50 Hz**					**CENELEC-design**							
30	**M3BP 280 SMB**	3GBP 286 220-••G	493	90.2	89.5	86.9	0.59	81.3	5.8	581	1.9	3	2.2	645	71
37	**M3BP 280 SMC**	3GBP 286 230-••G	493	90.6	89.8	87.2	0.58	101	6.3	716	2	3.2	2.85	725	71
45	**M3BP 315 SMB**	3GBP 316 220-••G	494	92.8	92.9	92	0.76	92	6.5	869	1.6	2.6	4.1	930	71
55	**M3BP 315 SMC**	3GBP 316 230-••G	493	93	93.2	92.4	0.77	110	6.5	1065	1.6	2.6	4.9	1000	71
75	**M3BP 315 MLA**	3GBP 316 410-••G	493	93.2	93.4	92.8	0.76	152	6.3	1452	1.5	2.5	5.8	1150	71
90	**M3BP 355 SMA**	3GBP 356 210-••G	495	93.5	93.5	92.5	0.72	192	5.7	1736	1.3	2.4	7.9	1520	75
110	**M3BP 355 SMB**	3GBP 356 220-••G	495	93.8	93.8	92.7	0.71	238	6	2122	1.4	2.5	9.7	1680	75
132	**M3BP 355 SMC**	3GBP 356 230-••G	495	93.9	93.9	92.9	0.71	285	6	2546	1.4	2.5	11.3	1820	77
160	**M3BP 355 MLB**	3GBP 356 420-••G	494	93.8	94	93.3	0.74	332	5.7	3092	1.3	2.4	13.5	2180	77
200 [1]	**M3BP 355 LKB**	3GBP 356 820-••G	494	93.9	94.1	93.4	0.73	421	5.8	3866	1.4	2.4	16.5	2600	79
200	**M3BP 400 LB**	3GBP 406 520-••G	495	95	95	94.3	0.79	384	5.4	3858	1.1	2.2	20	3100	82
200	**M3BP 400 LKB**	3GBP 406 820-••G	495	95	95	94.3	0.79	384	5.4	3858	1.1	2.2	20	3100	82
250	**M3BP 400 LC**	3GBP 406 530-••G	495	95.2	95.2	94.5	0.79	479	5.7	4822	1.1	2.2	24	3400	82
250	**M3BP 400 LKC**	3GBP 406 830-••G	495	95.2	95.2	94.5	0.79	479	5.7	4822	1.1	2.2	24	3400	82
315	**M3BP 450 LB**	3GBP 456 520-••G	496	95.6	95.6	94.8	0.76	625	5.5	6064	1	2.1	34	4300	82
355	**M3BP 450 LC**	3GBP 456 530-••G	495	95.6	95.6	95	0.76	705	5.3	6848	1	2	38	4550	82
400 [1]	**M3BP 450 LD**	3GBP 456 540-••G	495	95.7	95.8	95.2	0.77	783	5.3	7716	1	2	42	4800	82

[1] Temperature rise class F

The two bullets in the product code indicate choice of mounting arrangements, voltage and frequency code (see ordering information page).

I_s / I_N = Starting current
T_l / T_N = Locked rotor torque
T_b / T_N = Breakdown torque

Efficiency values are given according to IEC 60034-2-1; 2007.
Please note that the values are not comparable without knowing the testing method.
ABB has calculated the efficiency values according to indirect method, stray load losses (additional losses) determined from measuring.

Process performance cast iron motors variant codes

Code / Variant		Frame Size															
		71	80	90	100	112	132	160	180	200	225	250	280	315	355	400	450
Administration																	
530	2-year extension on standard warranty	NA	NA	NA	NA	NA	NA	R	R	R	R	R	M	M	M	P	P
531	Sea freight packing	NA	NA	NA	NA	NA	NA	NA	NA	NA	NA	NA	M	M	M	P	P
Balancing																	
417	Vibration acc. to Grade B (IEC 60034-14).	P	P	P	P	P	P	P	P	P	P	P	P	P	P	R	R
423	Balanced without key.	P	P	P	P	P	P	P	P	P	P	P	P	P	P	P	P
424	Full key balancing.	P	P	P	P	P	P	P	P	P	P	P	P	P	P	P	P
Bearings and Lubrication																	
036	Transport lock for bearings.	M	M	M	M	M	M	M	M	M	M	M	M	M	M	P	P
037	Roller bearing at D-end.	M	M	M	M	M	M	M	M	M	M	M	M	M	M	P	P
039	Cold resistant grease.	M	M	M	M	M	M	NA	NA	NA	NA	NA	M	M	M	P	P
040	Heat resistant grease.	M	M	M	M	M	M	NA	NA	NA	NA	NA	M	M	M	P	P
041	Bearings regreasable via grease nipples.	M	M	M	M	M	M	S	S	S	S	S	S	S	S	S	S
043	SPM compatible nipples for vibration measurement	P	P	P	P	P	P	S	S	S	S	S	S	S	S	S	S
057	2RS bearings at both ends.	M	M	M	M	M	M	M	M	M	M	M	NA	NA	NA	NA	NA
058	Angular contact bearing at D-end, shaft force away from bearing.	M	M	M	M	M	M	M	M	M	M	M	P	P	P	P	P
059	Angular contact bearing at N-end, shaft force towards bearing.	P	P	P	P	P	P	M	M	M	M	M	P	P	P	P	P
060	Angular contact bearing at D-end, shaft force towards bearing.	NA	NA	NA	NA	NA	NA	NA	NA	NA	NA	NA	P	P	P	P	P
061	Angular contact bearing at N-end, shaft force away from bearing.	NA	NA	NA	NA	NA	NA	NA	NA	NA	NA	NA	P	P	P	P	P
107	Pt100 2-wire in bearings.	NA	NA	NA	NA	NA	NA	P	P	P	P	P	M	M	M	P	P
128	Double PT100, 2-wire in bearings	NA	NA	NA	NA	NA	NA	NA	NA	NA	NA	NA	M	M	M	P	P
129	Double PT100, 3-wire in bearings	NA	NA	NA	NA	NA	NA	NA	NA	NA	NA	NA	M	M	M	P	P
130	Pt100 3-wire in bearings.	NA	NA	NA	NA	NA	NA	NA	NA	NA	NA	NA	M	M	M	P	P
194	2Z bearings greased for life at both ends.	NA	NA	NA	NA	NA	NA	M	M	M	M	M	NA	NA	NA	NA	NA
420	Bearing mounted PTC thermistors.	NA	NA	NA	NA	NA	NA	NA	NA	NA	NA	NA	P	P	P	P	P
433	Outlet grease collector	NA	NA	NA	NA	NA	NA	NA	NA	NA	NA	NA	P	P	P	P	P
506	Nipples for vibration measurement : SKF Marlin Quick Connect stud CMSS-2600-3	NA	NA	NA	NA	NA	NA	NA	NA	NA	NA	NA	P	P	P	P	P
796	Grease nipples JIS B 1575 PT 1/8 Type A	NA	NA	NA	NA	NA	NA	M	M	M	M	M	M	M	M	P	P
797	Stainless steel SPM Nipples	NA	NA	NA	NA	NA	NA	M	M	M	M	M	M	M	M	P	P
798	Stainless steel grease nipples	NA	NA	NA	NA	NA	NA	M	M	M	M	M	M	M	M	P	P
799	Grease nipples flat type DIN 3404, thread M10x1	NA	NA	NA	NA	NA	NA	NA	NA	NA	NA	NA	M	M	M	P	P
800	Grease nipples JIS B 1575 PT 1/8” pin type	NA	NA	NA	NA	NA	NA	NA	NA	NA	NA	NA	M	M	M	P	P
Brakes																	
412	Built-on brake.	NA	NA	NA	NA	NA	NA	R	R	R	R	R	P	P	P	P	R
Branch standard designs																	
142	“Manilla connection”.	NA	NA	P	P	P	P	P	P	P	P	P	P	P	NA	NA	NA
178	Stainless steel / acid proof bolts.	M	M	M	M	M	M	M	M	M	M	M	M	M	M	P	P
204	Jacking bolts for foot mounted motors.	NA	NA	NA	NA	NA	NA	NA	NA	NA	NA	NA	P	P	S	S	S
209	Non-standard voltage or frequency, (special winding).	P	P	P	P	P	P	P	P	P	P	P	P	P	P	P	P
396	Motor designed for ambient temperature -20°C to -40°C, wtih space heaters (code 450/451 must be added).	NA	NA	NA	NA	NA	NA	R	R	R	R	R	P	P	P	P	P
397	Motor designed for ambient temperature -40°C to -55°C, wtih space heaters (code 450/451 must be added).	NA	NA	NA	NA	NA	NA	NA	NA	NA	NA	NA	P	P	P	P	P

Note: Variant code option list also valid for premium efficiency motors M4BP 160-355. Certain variant codes cannot be used simultaneously.

S = Included as standard
P = New manufacture only
M = On modification of a stocked motor; or on new manufacture, the number of number per order may be limited.
R = On request
NA = Not applicable.

Code / Variant		Frame Size															
		71	80	90	100	112	132	160	180	200	225	250	280	315	355	400	450
398	Motor designed for ambient temperature -20°C to -40°C.	NA	NA	NA	NA	NA	NA	R	R	R	R	R	P	P	P	P	P
399	Motor designed for ambient temperature -40°C to -55°C.	NA	NA	NA	NA	NA	NA	NA	NA	NA	NA	NA	P	P	P	P	P
419	Textile industry design.	NA	NA	NA	NA	NA	NA	M	M	M	M	M	P	P	NA	NA	NA
425	Corrosion protected stator and rotor core.	M	M	M	M	M	M	P	P	P	P	P	P	P	P	P	P
443	Special rotor design for GTO-converter duty	NA	NA	NA	NA	NA	NA	NA	NA	NA	NA	NA	NA	NA	P	R	NA
785	Reinforced tropicalisation.	NA	NA	NA	NA	NA	NA	P	P	P	P	P	NA	NA	NA	NA	NA
Cooling system																	
044	Unidirectional fan for reduced noise level. Rotation clockwise seen from D-end. Available only for 2-pole motors.	NA	NA	NA	NA	NA	NA	NA	NA	NA	NA	NA	P	P	P	S	S
045	Unidirectional fan for reduced noise level. Rotation counter clockwise seen from D-end. Available only for 2-pole motors.	NA	NA	NA	NA	NA	NA	NA	NA	NA	NA	NA	P	P	P	S	S
068	Light alloy metal fan	M	M	M	M	M	M	M	M	M	M	M	M	M	M	P	P
075	Cooling method IC418 (without fan).	P	P	P	P	P	P	M	M	M	M	M	P	P	P	P	P
183	Separate motor cooling (fan axial, N-end).	NA	NA	P	P	P	P	M	M	M	M	M	M	M	P	P	P
189	Separate motor cooling, IP44, 400V, 50Hz (fan axial, N-end).	NA	NA	NA	NA	NA	NA	M	M	M	M	M	NA	NA	NA	NA	NA
206	Steel fan	NA	NA	NA	NA	NA	NA	NA	NA	NA	NA	NA	P	P	P	P	NA
422	Separate motor cooling (fan top, N-end).	NA	NA	NA	NA	NA	NA	NA	NA	NA	NA	NA	P	P	P	P	P
791	Stainless steel fan cover	NA	NA	NA	NA	NA	NA	NA	NA	NA	NA	NA	P	P	P	P	P
793	Fan for reduced noise level (2-p fan).	NA	NA	NA	NA	NA	NA	R	R	R	R	R	NA	NA	NA	NA	NA
794	Fan for reduced noise level (4-p fan).	NA	NA	NA	NA	NA	NA	R	R	R	R	R	NA	NA	NA	NA	NA
Coupling																	
035	Assembly of customer supplied coupling-half.	NA	NA	NA	NA	NA	NA	NA	NA	NA	NA	NA	P	P	P	P	P
Documentation																	
141	Binding dimension drawing.	M	M	M	M	M	M	M	M	M	M	M	M	M	M	P	P
Drain holes																	
065	Plugged existing drain holes.	M	M	M	M	M	M	M	M	M	M	M	M	M	M	P	P
448	Draining holes with metal plugs.	NA	NA	NA	NA	NA	NA	NA	NA	NA	NA	NA	P	P	P	P	P
Earthing Bolt																	
067	External earthing bolt.	S	S	S	S	S	S	S	S	S	S	S	S	S	S	S	S
Hazardous Environments																	
452	DIP/Ex tD acc. to ATEX directive 94/9/EC, T= 125°C, cat. 3D, IP55	M	M	M	M	M	M	M	M	M	M	M	M	M	M	NA	NA
453	DIP/Ex tD acc. to ATEX directive 94/9/EC, T= 125°C, cat. 2D, IP65	P	P	P	P	P	P	R	R	R	R	R	M	M	M	NA	NA
454	DIP/Ex tD acc. to ATEX directive 94/9/EC, T= 125°C, cat. 3D, IP65	NA	NA	NA	NA	NA	NA	R	R	R	R	R	M	M	M	NA	NA
Heating elements																	
450	Heating element, 100-120V.	M	M	M	M	M	M	M	M	M	M	M	M	M	M	P	P
451	Heating element, 200-240V.	M	M	M	M	M	M	M	M	M	M	M	M	M	M	P	P
Insulation system																	
014	Winding insulation class H.	P	P	P	P	P	P	P	P	P	P	P	P	P	P	P	P
405	Special winding insulation for frequency converter supply.	P	P	P	P	P	P	P	P	P	P	P	P	P	P	P	P
406	Winding for supply >690<=1000 Volts.	NA	NA	NA	NA	NA	NA	NA	NA	P	P	P	P	P	P	P	P
Marine motors																	
	See catalog “Marine motors” for details.																

Note: Variant code option list also valid for premium efficiency motors M4BP 160-355. Certain variant codes cannot be used simultaneously.

S = Included as standard
P = New manufacture only
M = On modification of a stocked motor; or on new manufacture, the number of number per order may be limited.
R = On request
NA = Not applicable.

Code / Variant		Frame Size															
		71	80	90	100	112	132	160	180	200	225	250	280	315	355	400	450
Mounting arrangements																	
008	IM 2101 foot/flange mounted, IEC flange, from IM 1001 (B34 from B3).	M	M	M	M	M	M	NA	NA	NA	NA	NA	NA	NA	NA	NA	NA
009	IM 2001 foot/flange mounted, IEC flange, from IM 1001 (B35 from B3).	M	M	M	M	M	M	M	M	M	M	M	M	M	M	P	P
047	IM 3601 flange mounted, IEC flange, from IM 3001 (B14 from B5).	M	M	M	M	M	M	NA	NA	NA	NA	NA	NA	NA	NA	NA	NA
066	Modified for non-standard mounting position (please specify IM xxxx), (must be ordered for all mounting arrangements excluding IM B3 (1001), IM B5 (3001), IM B35 (2001), B34 (2101) & B14 (3601).	M	M	M	M	M	M	M	M	M	M	M	M	M	M	P	P
304	PAD mounting according to BS4999-141.	NA	NA	NA	NA	NA	NA	R	R	R	R	R	R	R	NA	NA	NA
305	Additional lifting lugs.	NA	NA	NA	NA	NA	NA	M	M	M	M	M	P	P	P	P	P
Noise reduction																	
055	Noise reducing cover.	NA	NA	NA	NA	NA	NA	NA	NA	NA	NA	NA	P	P	P	P	P
Painting																	
114	Special paint colour, standard grade.	M	M	M	M	M	M	M	M	M	M	M	M	M	M	P	P
115	Painting system C4M acc. To ISO 12944-5: 2007	NA	NA	P	P	P	P	R	R	R	R	R	P	P	P	P	P
168	Primer paint only.	NA	NA	P	P	P	P	NA	NA	NA	NA	NA	P	P	P	P	P
179	Special paint specification.	R	R	R	R	R	R	R	R	R	R	R	R	R	R	R	R
754	Painting system C5M acc. to ISO 12944-5:2007	NA	NA	P	P	P	P	R	R	R	R	R	P	P	P	P	P
755	Zinc-coating and epoxy painting for offshore environment (only available in Blue, Munsell 8B 4.5/3.25)	NA	NA	NA	NA	NA	NA	NA	NA	NA	NA	NA	P	P	P	P	P
Protection																	
005	Metal protective roof, vertical motor, shaft down.	M	M	M	M	M	M	M	M	M	M	M	M	M	M	P	P
072	Radial seal at D-end.	M	M	M	M	M	M	M	M	M	M	M	M	M	P	P	P
073	Sealed against oil at D-end.	NA	NA	NA	NA	NA	NA	M	M	M	M	M	P	P	P	P	P
158	Degree of protection IP65.	M	M	M	M	M	M	M	M	M	M	M	M	M	M	P	P
211	Weather protected, IP xx W	M	M	M	M	M	M	M	M	M	M	M	NA	NA	NA	NA	NA
403	Degree of protection IP56.	M	M	M	M	M	M	M	M	M	M	M	M	M	M	P	P
404	Degree of protection IP56, without fan and fan cover.	NA	NA	P	P	P	P	P	P	P	P	P	R	R	R	NA	NA
434	Degree of protection IP56, open deck.	NA	NA	P	P	P	P	NA	NA	NA	NA	NA	P	P	P	P	R
783	Labyrinth sealing at D-end.	NA	NA	NA	NA	NA	NA	NA	NA	NA	NA	NA	P	P	S	S	S
784	Gamma-seal at D-end.	S	S	S	S	S	S	S	S	S	S	S	NA	NA	NA	NA	NA
Rating & instruction plates																	
002	Restamping voltage, frequency and output, continuous duty.	M	M	M	M	M	M	M	M	M	M	M	M	M	M	P	P
004	Additional text on std rating plate (max 12 digits on free text line).	NA	NA	NA	NA	NA	NA	M	M	M	M	M	M	M	M	P	P
095	Restamping output (maintained voltage, frequency), intermittent duty.	M	M	M	M	M	M	M	M	M	M	M	P	P	P	P	P
126	Tag plate	NA	NA	NA	NA	NA	NA	NA	NA	NA	NA	NA	P	P	P	P	P
135	Mounting of additional identification plate, stainless.	M	M	M	M	M	M	M	M	M	M	M	M	M	M	P	P
138	Mounting of additional identification plate, aluminium.	M	M	M	M	M	M	NA	NA	NA	NA	NA	NA	NA	NA	NA	NA
139	Additional identification plate delivered loose.	M	M	M	M	M	M	M	M	M	M	M	M	M	M	P	P
160	Additional rating plate affixed.	M	M	M	M	M	M	M	M	M	M	M	M	M	M	P	P
161	Additional rating plate delivered loose.	M	M	M	M	M	M	M	M	M	M	M	M	M	M	P	P
163	Frequency converter rating plate. Rating data according to quotation.	M	M	M	M	M	M	M	M	M	M	M	M	M	M	P	P

Note: Variant code option list also valid for premium efficiency motors M4BP 160-355. Certain variant codes cannot be used simultaneously.

S = Included as standard
P = New manufacture only
M = On modification of a stocked motor; or on new manufacture, the number of number per order may be limited.
R = On request
NA = Not applicable.

Code / Variant		Frame Size															
		71	80	90	100	112	132	160	180	200	225	250	280	315	355	400	450
Shaft & rotor																	
069	Two shaft extensions as per basic catalogue.	P	P	P	P	P	P	P	P	P	P	P	P	P	P	P	P
070	One or two special shaft extensions, standard shaft material.	R	R	R	R	R	R	R	R	R	R	R	P	P	P	P	P
131	Motor delivered with half key (Key not exceeding shaft diameter)	M	M	M	M	M	M	M	M	M	M	M	NA	NA	NA	NA	NA
164	Shaft extension with closed key-way.	S	S	S	S	S	S	S	S	S	S	S	P	P	P	P	R
165	Shaft extension with open key-way.	P	P	P	P	P	P	P	P	P	P	P	S	S	S	S	S
410	Stainless steel shaft (standard or non-standard design).	P	P	P	P	P	P	R	R	R	R	R	P	P	P	P	P
Standards and Regulations																	
010	Fulfilling CSA Safety Certificate.	NA	NA	NA	NA	NA	NA	M	M	M	M	M	P	P	P	P	P
011	Fulfilling CSA Energy Efficiency Verification (code 010 included).	NA	NA	NA	NA	NA	NA	M	M	M	M	M	P	P	NA	NA	NA
151	Design according to SHELL DEP 33.66.05.31-Gen. June 2007	NA	NA	NA	NA	NA	NA	NA	NA	NA	NA	NA	P	P	P	P	NA
408	Fulfilling EPAct certification requirements, CC031A.	NA	NA	NA	NA	NA	NA	NA	NA	NA	NA	NA	P	P	NA	NA	NA
421	VIK design (Verband der Industriellen Energie- und Kraftwirtschaft e.V.).	NA	NA	P	P	P	P	NA	NA	NA	NA	NA	P	P	P	P	NA
500	Fulfilling Korean MEPS efficiency regulations	NA	NA	NA	NA	NA	NA	R	R	R	R	R	M	M	M	NA	NA
505	VIK design with ABB standard shaft dimensions (Verband der Industriellen Energie- und Kraftwirtschaft e.V.).	NA	NA	NA	NA	NA	NA	NA	NA	NA	NA	NA	M	M	M	NA	NA
540	China energy label	NA	NA	NA	NA	NA	NA	R	R	R	R	R	M	M	M	NA	NA
756	EDF design (Electricité de France), non-classified zone.	NA	NA	NA	NA	NA	NA	NA	NA	NA	NA	NA	P	P	P	R	R
757	EDF design (Electricité de France), zone E1 K3.	NA	NA	NA	NA	NA	NA	NA	NA	NA	NA	NA	P	P	P	R	R
774	Design according to NORSOK (Norwegian Territorial Waters)excluding surface treatment.	NA	NA	NA	NA	NA	NA	NA	NA	NA	NA	NA	P	P	P	P	P
775	Design according to SHELL DEP 33.66.05.31-Gen. January 1999 design.	NA	NA	NA	NA	NA	NA	NA	NA	NA	NA	NA	M	M	P	P	NA
778	GOST Export/Import Certificate (Russia).	NA	NA	NA	NA	NA	NA	M	M	M	M	M	M	M	M	P	P
779	SASO Export/Import Certificate (Saudi Arabia)	NA	NA	NA	NA	NA	NA	NA	NA	NA	NA	NA	M	M	M	P	P
802	GOST Kazakhstan certified	NA	NA	NA	NA	NA	NA	NA	NA	NA	NA	NA	P	P	P	P	P
Stator winding temperature sensors																	
120	KTY 84-130 (1 per phase) in stator winding.	NA	NA	NA	NA	NA	NA	R	R	R	R	R	P	P	P	P	P
121	Bimetal detectors, break type (NCC), (3 in series), 130ºC, in stator winding.	M	M	M	M	M	M	M	M	M	M	M	M	M	M	P	P
122	Bimetal detectors, break type (NCC), (3 in series), 150ºC, in stator winding.	M	M	M	M	M	M	M	M	M	M	M	M	M	M	P	P
123	Bimetal detectors, break type (NCC), (3 in series), 170ºC, in stator winding.	NA	NA	M	M	M	M	M	M	M	M	M	M	M	M	P	P
124	Bimetal detectors, break type (NCC), (3 in series), 140ºC, in stator winding.	NA	NA	M	M	M	M	M	M	M	M	M	M	M	M	P	P
125	Bimetal detectors, break type (NCC), (2x3 in series), 150ºC, in stator winding.	NA	NA	M	M	M	M	M	M	M	M	M	P	P	P	P	P
127	Bimetal detectors, break type (NCC), (3 in series, 130ºC & 3 in series, 150ºC), in stator winding.	NA	NA	M	M	M	M	M	M	M	M	M	P	P	P	P	P
435	PTC - thermistors (3 in series), 130ºC, in stator winding.	M	M	M	M	M	M	M	M	M	M	M	M	M	M	P	P
436	PTC - thermistors (3 in series), 150ºC, in stator winding.	S	S	S	S	S	S	S	S	S	S	S	S	S	S	S	S

Note: Variant code option list also valid for premium efficiency motors M4BP 160-355. Certain variant codes cannot be used simultaneously.

S = Included as standard
P = New manufacture only
M = On modification of a stocked motor; or on new manufacture, the number of number per order may be limited.
R = On request
NA = Not applicable.

Code / Variant		Frame Size															
		71	80	90	100	112	132	160	180	200	225	250	280	315	355	400	450
437	PTC - thermistors (3 in series), 170ºC, in stator winding.	M	M	M	M	M	M	M	M	M	M	M	M	M	M	P	P
438	PTC - thermistors (3 in series), 190ºC, in stator winding.	NA	NA	NA	NA	NA	NA	NA	NA	NA	NA	NA	P	P	P	P	P
439	PTC - thermistors (2x3 in series), 150ºC, in stator winding.	M	M	M	M	M	M	M	M	M	M	M	M	M	M	P	P
441	PTC - thermistors (3 in series, 130ºC & 3 in series, 150ºC), in stator winding.	M	M	M	M	M	M	M	M	M	M	M	M	M	M	P	P
442	PTC - thermistors (3 in series, 150ºC & 3 in series, 170ºC), in stator winding.	M	M	M	M	M	M	M	M	M	M	M	M	M	M	P	P
445	Pt-100 2-wire in stator winding, 1 per phase	NA	NA	P	P	P	P	M	M	M	M	M	M	M	M	P	P
446	Pt-100 2-wire in stator winding, 2 per phase	NA	NA	NA	NA	NA	NA	M	M	M	M	M	M	M	M	P	P
502	Pt-100 3-wire in stator winding, 1 per phase.	NA	NA	NA	NA	NA	NA	NA	NA	NA	NA	NA	M	M	M	P	P
503	Pt-100 3-wire in stator winding, 2 per phase.	NA	NA	NA	NA	NA	NA	NA	NA	NA	NA	NA	M	M	M	P	P
Terminal box																	
015	Motor supplied in D connection.	M	M	M	M	M	M	M	M	M	M	M	NA	NA	NA	NA	NA
017	Motor supplied in Y connection.	NA	NA	M	M	M	M	M	M	M	M	M	NA	NA	NA	NA	NA
019	Larger than standard terminal box.	M	M	M	M	M	M	NA	NA	NA	NA	NA	P	P	P	P	NA
020	Detached terminal box.	NA	NA	NA	NA	NA	NA	NA	NA	NA	NA	NA	P	P	P	P	P
021	Terminal box LHS (seen from D-end).	NA	NA	M	M	M	M	P	P	P	P	P	P	P	P	P	NA
022	Cable entry LHS (seen from D-end).	NA	NA	NA	NA	NA	NA	M	M	M	M	M	M	M	M	P	P
157	Terminal box degree of protection IP65.	NA	NA	P	P	P	P	M	M	M	M	M	M	M	M	P	NA
180	Terminal box RHS (seen from D-end).	NA	NA	M	M	M	M	P	P	P	P	P	P	P	P	P	NA
230	Standard metal cable glands.	M	M	M	M	M	M	M	M	M	M	M	S	S	S	S	S
231	Standard cable glands with clamping device.	NA	NA	NA	NA	NA	NA	NA	NA	NA	NA	NA	P	P	P	P	P
277	Cable sealing end unit, size small for C-opening	NA	NA	NA	NA	NA	NA	NA	NA	NA	NA	NA	P	NA	NA	NA	NA
278	Cable sealing end unit, size medium for D-opening	NA	NA	NA	NA	NA	NA	NA	NA	NA	NA	NA	NA	P	P	P	P
279	Cable sealing end unit, size large for D-opening	NA	NA	NA	NA	NA	NA	NA	NA	NA	NA	NA	NA	P	P	P	P
292	Adapter C-C	NA	NA	NA	NA	NA	NA	NA	NA	NA	NA	NA	P	NA	NA	NA	NA
293	Adapter D-D	NA	NA	NA	NA	NA	NA	NA	NA	NA	NA	NA	NA	P	P	NA	NA
294	Adapter E-D	NA	NA	NA	NA	NA	NA	NA	NA	NA	NA	NA	NA	P	P	P	NA
295	Adapter E-2D	NA	NA	NA	NA	NA	NA	NA	NA	NA	NA	NA	NA	P	P	P	S
296	Adapter E-3D	NA	NA	NA	NA	NA	NA	NA	NA	NA	NA	NA	NA	NA	NA	NA	P
375	Standard plastic cable gland	M	M	M	M	M	M	NA	NA	NA	NA	NA	NA	NA	NA	NA	NA
380	Separate terminal box for temperature detectors, std. material	NA	NA	NA	NA	NA	NA	M	M	M	M	M	P	P	P	P	P
400	4 * 90 degr turnable terminal box	NA	NA	NA	NA	NA	NA	S	S	S	S	S	S	S	S	NA	NA
409	Large terminal box with two terminal blocks.	NA	NA	NA	NA	NA	NA	NA	NA	NA	NA	NA	P	P	NA	NA	NA
413	Extended cable connection, no terminal box.	NA	NA	NA	NA	NA	NA	NA	NA	NA	NA	NA	P	P	P	P	P
418	Separate terminal box for auxiliaries, standard material.	R	R	R	R	R	R	NA	NA	NA	NA	NA	P	P	P	P	P
444	Adapter E-2E.	NA	NA	NA	NA	NA	NA	NA	NA	NA	NA	NA	NA	NA	NA	NA	P
447	Top mounted separate terminal box for monitoring equipment.	NA	NA	NA	NA	NA	NA	NA	NA	NA	NA	NA	M	M	M	NA	NA
466	Terminal box at N-end.	NA	NA	NA	NA	NA	NA	R	R	R	R	R	P	P	P	P	P
467	Lower than standard terminal box and rubber extended cable. Cable length 2m.	NA	NA	NA	NA	NA	NA	P	P	P	P	P	NA	NA	NA	NA	NA
468	Cable entry from D-end.	M	M	M	M	M	M	R	R	R	R	R	M	M	P	P	NA
469	Cable entry from N-end.	M	M	M	M	M	M	M	M	M	M	M	P	P	P	P	NA
567	Separate terminal box material: Cast Iron	NA	NA	NA	NA	NA	NA	NA	NA	NA	NA	NA	P	P	P	P	P
568	Separate terminal box for heating elements, std. material	NA	NA	NA	NA	NA	NA	NA	NA	NA	NA	NA	P	P	P	P	P
569	Separate terminal box for brakes	NA	NA	NA	NA	NA	NA	NA	NA	NA	NA	NA	P	P	P	P	P

Note: Variant code option list also valid for premium efficiency motors M4BP 160-355. Certain variant codes cannot be used simultaneously.

S = Included as standard
P = New manufacture only
M = On modification of a stocked motor; or on new manufacture, the number of number per order may be limited.
R = On request
NA = Not applicable.

Code / Variant		Frame Size															
		71	80	90	100	112	132	160	180	200	225	250	280	315	355	400	450
729	Aluminum non-drilled flange for cable glands	NA	NA	NA	NA	NA	NA	M	M	M	M	M	M	M	M	P	P
730	Prepared for NPT cable glands	M	M	M	M	M	M	NA	NA	NA	NA	NA	P	P	P	P	P
731	Two standard metal cable glands.	M	M	M	M	M	M	M	M	M	M	M	S	S	S	S	S
732	Standard cable gland, Ex d IIB, armoured cable.	NA	NA	NA	NA	NA	NA	NA	NA	NA	NA	NA	P	P	P	P	P
740	Prepared for PG cable glands.	NA	NA	NA	NA	NA	NA	M	M	M	M	M	NA	NA	NA	NA	NA
742	Protective cover for accessory terminal block in main terminal box.	NA	NA	NA	NA	NA	NA	NA	NA	NA	NA	NA	M	M	M	P	P
743	Painted non-drilled flange in steel for cable glands	NA	NA	NA	NA	NA	NA	M	M	M	M	M	M	M	M	P	P
744	Stainless steel non-drilled flange for cable glands.	NA	NA	NA	NA	NA	NA	M	M	M	M	M	M	M	M	P	P
745	Painted steel flange equipped with nickle plated brass cable glands	NA	NA	NA	NA	NA	NA	NA	NA	NA	NA	NA	M	M	M	P	P
746	Stainless steel cable flange equipped with standard nickle plated brass cable glands	NA	NA	NA	NA	NA	NA	NA	NA	NA	NA	NA	P	P	P	P	P
Testing																	
140	Test confirmation.	M	M	M	M	M	M	M	M	M	M	M	NA	NA	NA	NA	NA
145	Type test report from a catalogue motor, 400V 50Hz.	M	M	M	M	M	M	M	M	M	M	M	M	M	M	P	P
146	Type test with report for one motor from specific delivery batch.	NA	NA	M	M	M	M	M	M	M	M	M	P	P	P	P	P
147	Type test with report for motor from specific delivery batch, customer witnessed.	NA	NA	M	M	M	M	M	M	M	M	M	NA	NA	NA	NA	NA
148	Routine test report.	M	M	M	M	M	M	M	M	M	M	M	M	M	M	P	P
150	Customer witnessed testing. Specify test procedure with other codes.	NA	NA	NA	NA	NA	NA	NA	NA	NA	NA	NA	P	P	P	P	P
153	Reduced test for classification society.	M	M	M	M	M	M	M	M	M	M	M	NA	NA	NA	NA	NA
221	Type test and multi-point load test with report for one motor from specific delivery batch.	NA	NA	P	P	P	P	M	M	M	M	M	R	R	R	R	R
222	Torque/speed curve, type test and multi-point load test with report for one motor from specific delivery batch.	NA	NA	M	M	M	M	M	M	M	M	M	P	P	P	P	P
760	Vibration level test	P	P	P	P	P	P	M	M	M	M	M	M	M	M	P	P
761	Vibration spectrum test for one motor from specific delivery batch.	R	R	R	R	R	R	NA	NA	NA	NA	NA	P	P	P	P	P
762	Noise level test for one motor from specific delivery batch.	P	P	P	P	P	P	M	M	M	M	M	P	P	P	P	P
763	Noise spectrum test for one motor from specific delivery batch.	P	P	P	P	P	P	NA	NA	NA	NA	NA	P	P	P	P	P
764	Test for one motor from specific delivery batch with ABB frequency converter available at ABB test field. ABB standard test procedure.	R	R	R	R	R	R	NA	NA	NA	NA	NA	P	P	P	P	P
Variable speed drives																	
062	Tachogenerator.	NA	NA	NA	NA	NA	NA	NA	NA	NA	NA	NA	P	P	P	P	P
182	Mounting of non-listed pulse tacho.	NA	NA	NA	NA	NA	NA	NA	NA	NA	NA	NA	P	P	P	P	P
429	Separate motor cooling (fan top, N-end) and 1024 pulse tacho (Leine & Linde 861) mounted.	NA	NA	NA	NA	NA	NA	NA	NA	NA	NA	NA	P	P	P	P	P
470	Prepared for hollow shaft pulse tacho (L&L equivalent).	NA	NA	NA	NA	NA	NA	M	M	M	M	M	P	P	P	P	P
472	1024 pulse tacho (L&L 861007455-1024).	NA	NA	P	P	P	P	M	M	M	M	M	P	P	P	P	P
473	2048 pulse tacho (L&L 861007455-2048).	NA	NA	P	P	P	P	M	M	M	M	M	P	P	P	P	P
474	Separate motor cooling (fan axial, N-end) and prepared for hollow shaft tacho (L&L equivalent).	NA	NA	NA	NA	NA	NA	M	M	M	M	M	P	P	P	P	P
476	Separate motor cooling (fan axial, N-end) and 1024 pulse tacho (L&L 861007455-1024).	NA	NA	NA	NA	NA	NA	M	M	M	M	M	P	P	P	P	P

Note: Variant code option list also valid for premium efficiency motors M4BP 160-355. Certain variant codes cannot be used simultaneously.

S = Included as standard
P = New manufacture only
M = On modification of a stocked motor; or on new manufacture, the number of number per order may be limited.
R = On request
NA = Not applicable.

Code / Variant		Frame Size															
		71	80	90	100	112	132	160	180	200	225	250	280	315	355	400	450
477	Separate motor cooling (fan axial, N-end) and 2048 pulse tacho (L&L 861007455-2048).	NA	NA	NA	NA	NA	NA	M	M	M	M	M	P	P	P	P	P
478	Separate motor cooling (fan top, N-end) and prepared for hollow shaft tacho (L&L equivalent).	NA	NA	NA	NA	NA	NA	NA	NA	NA	NA	NA	P	P	P	P	P
479	Mounting of other type of pulse tacho with shaft extension, tacho not included.	NA	NA	NA	NA	NA	NA	R	R	R	R	R	P	P	P	P	P
486	Separate motor cooling (fan top, N-end) and prepared for DC-tacho.	NA	NA	NA	NA	NA	NA	NA	NA	NA	NA	NA	P	P	P	P	P
510	Separate motor cooling (fan top, N-end) and 2048 pulse tacho (Leine & Linde 861) mounted.	NA	NA	NA	NA	NA	NA	NA	NA	NA	NA	NA	P	P	P	P	P
570	Prepared for hollow shaft pulse tacho (L&L 503).	NA	NA	NA	NA	NA	NA	M	M	M	M	M	NA	NA	NA	NA	NA
572	1024 pulse tacho (L&L 503).	NA	NA	NA	NA	NA	NA	M	M	M	M	M	NA	NA	NA	NA	NA
573	2048 pulse tacho (L&L 503).	NA	NA	NA	NA	NA	NA	M	M	M	M	M	NA	NA	NA	NA	NA
574	Separate motor cooling (fan axial, N-end) and prepared for hollow shaft tacho (L&L 503).	NA	NA	NA	NA	NA	NA	M	M	M	M	M	NA	NA	NA	NA	NA
576	Separate motor cooling (fan axial, N-end) and 1024 pulse tacho (L&L 503).	NA	NA	NA	NA	NA	NA	M	M	M	M	M	NA	NA	NA	NA	NA
577	Separate motor cooling (fan axial, N-end) and 2048 pulse tacho (L&L 503).	NA	NA	NA	NA	NA	NA	M	M	M	M	M	NA	NA	NA	NA	NA
578	Separate motor cooling, IP44, 400V, 50Hz (fan axial, N-end) and prepared for hollow shaft tacho (L&L 503).	NA	NA	NA	NA	NA	NA	M	M	M	M	M	NA	NA	NA	NA	NA
580	Separate motor cooling, IP44, 400V, 50Hz (fan axial, N-end) and 1024 pulse tacho (L&L 503).	NA	NA	NA	NA	NA	NA	M	M	M	M	M	NA	NA	NA	NA	NA
581	Separate motor cooling, IP44, 400V, 50Hz (fan axial, N-end) and 2048 pulse tacho (L&L 503).	NA	NA	NA	NA	NA	NA	M	M	M	M	M	NA	NA	NA	NA	NA
582	1024 Pulse tacho, GHK912-GBR-1024, BEI IDEACOD	NA	NA	NA	NA	NA	NA	NA	NA	NA	NA	NA	P	P	P	P	P
583	2048 Pulse tacho, GHK912-GBR-2048, BEI IDEACOD	NA	NA	NA	NA	NA	NA	NA	NA	NA	NA	NA	P	P	P	P	P
658	Special tacho mounted, price category 1	NA	NA	NA	NA	NA	NA	NA	NA	NA	NA	NA	P	P	P	P	P
659	Special tacho mounted, price category 2	NA	NA	NA	NA	NA	NA	NA	NA	NA	NA	NA	P	P	P	P	P
660	Special tacho mounted, price category 3	NA	NA	NA	NA	NA	NA	NA	NA	NA	NA	NA	P	P	P	P	P
701	Insulated bearing at N-end.	NA	NA	NA	NA	NA	NA	P	P	P	P	P	M	M	M	P	P
704	EMC cable gland.	M	M	M	M	M	M	M	M	M	M	M	M	M	M	P	P
Y/Δ starting																	
117	Terminals for Y/Δ start at both speeds (two speed windings).	NA	NA	P	P	P	P	P	P	P	P	P	P	P	R	R	R
118	Terminals for Y/Δ start at high speed (two speed windings).	NA	NA	P	P	P	P	NA	NA	NA	NA	NA	P	P	R	R	R
119	Terminals for Y/Δ start at low speed (two speed windings).	NA	NA	M	M	M	M	NA	NA	NA	NA	NA	P	P	R	R	R

Note: Variant code option list also valid for premium efficiency motors M4BP 160-355. Certain variant codes cannot be used simultaneously.

S = Included as standard
P = New manufacture only
M = On modification of a stocked motor; or on new manufacture, the number of number per order may be limited.
R = On request
NA = Not applicable.

Process performance cast iron motors and premium efficiency motors Sizes 71-132

Dimension drawings

Foot-mounted motor; IM B3 (IM 1001), IM 1002

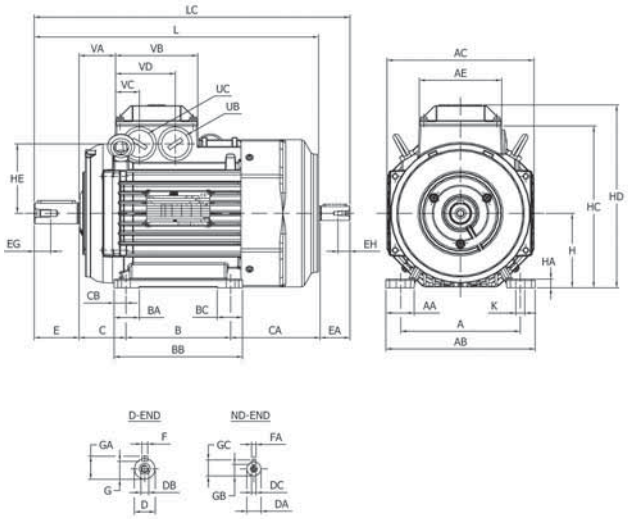

Flange-mounted motor, large flange; IM B5 (IM 3001), IM 3002

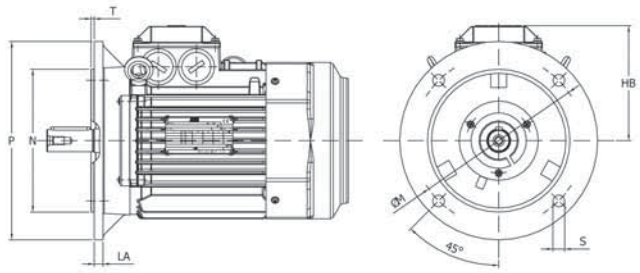

M000417

Flange-mounted motor, small flange; IM B14 (IM 3601)

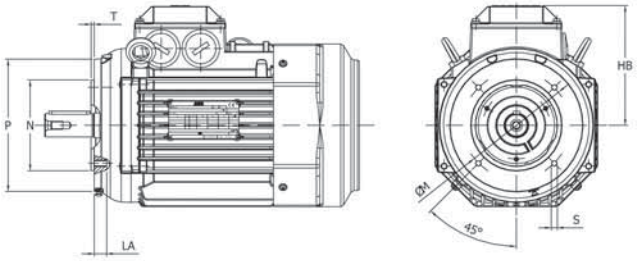

IM B3 (IM 1001), IM 1002

Motor size	A	AA	AB	AC	AE	AF	B	BA	BB	BC	C	CA	CB	D-Tol.	DA	DB	DC	E	EA	EG	EH
71	112	24	136	139	105	139	90	24	110	24	45	104	10	14-j6	11	M5	M4	30	23	12.5	10
80	125	28	154	157	105	157	100	28	125	28	50	136	12.5	19-j6	14	M6	M5	40	30	16	12.5
90S	140	30	170	177	118	177	100	30	150	55	56	156	12.5	24-j6	14	M8	M5	50	30	19	12.5
90L	140	30	170	177	118	177	125	30	150	55	56	131	12.5	24-j6	14	M8	M5	50	30	19	12.5
100	160	38	200	197	118	197	140	34	172	34	63	123	16	28-j6	19	M10	M6	60	40	22	16
112	190	41	230	197	118	197	140	34	172	34	70	138	16	28-j6	19	M10	M6	60	40	22	16
132S	216	47	262	268.5	169	261	140	40	212	76	89	228	16	38-k6	24	M12	M8	80	50	28	19
132M	216	47	262	268.5	169	261	178	40	212	76	89	190	16	38-k6	24	M12	M8	80	50	28	19

Motor size	F	FA	G	GA	GB	GC	H	HA	HC	HD	HE	K	L	LC	UB	UC	VA	VB	VC	VD
71	5	4	11	16	8.5	12.5	71	9	151	178	62	7	264	292	M16x1,5	M16x1,5	30	105	31.5	73.5
80	6	5	15.5	21.5	11	16	80	10	168	195	69	10	321	356	M25x1,5	M25x1,5	32	105	32	74
90	8	5	20	27	11	16	90	11	189	219	79	10	357	392	M25x1,5	M25x1,5	42	118	39	81
100	8	6	24	31	15.5	21.5	100	12	217	247	94	12	381	426	M32x1,5	M32x1,5	45	118	36	84
112	8	6	24	31	15.5	21.5	112	12	229	259	94	12	403	448	M32x1,5	M32x1,5	45	118	36	84
132	10	8	33	41	20	27	132	14	272	300	116	12	533	588	M32x1,5	M32x1,5	65	169	82	130

IM B5 (IM3001), IM 3002

Motor size	HB	LA	M	N	P	S	T
71	107.5	9	130	110	160	10	3.5
80	115.5	10	165	130	200	12	3.5
90	129.5	10	165	130	200	12	3.5
100	147.5	11	215	180	250	15	4.0
112	147.5	11	215	180	250	15	4.0
132	168	12.5	265	230	300	15	4.0

IM B14 (IM3601), IM 3602

Motor size	HB	LA	M	N	P	S	T
71	107.5	8	85	70	105	M6	2.5
80	115.5	8	100	80	120	M6	3.0
90	129.5	10	115	95	140	M8	3.0
100	147.5	10	130	110	160	M8	3.5
112	147.5	10	130	110	160	M8	3.5
132	168	12	165	130	200	M10	3.5

Tolerances:

A,B	+ - 0.8	H	+0 -0.5
D, DA	ISO j6	N	ISO j6
F, FA	ISO h9	C, CA	+- 0.8

Above table gives the main dimensions in mm. For detailed drawings please see our web-pages 'www.abb.com/motors&generators' or contact ABB.

Process performance cast iron motors and premium efficiency motors

Sizes 71-132

Dimension drawings

Foot- and flange-mounted motor; IM B35 (IM 2001), IM 2002, large flange

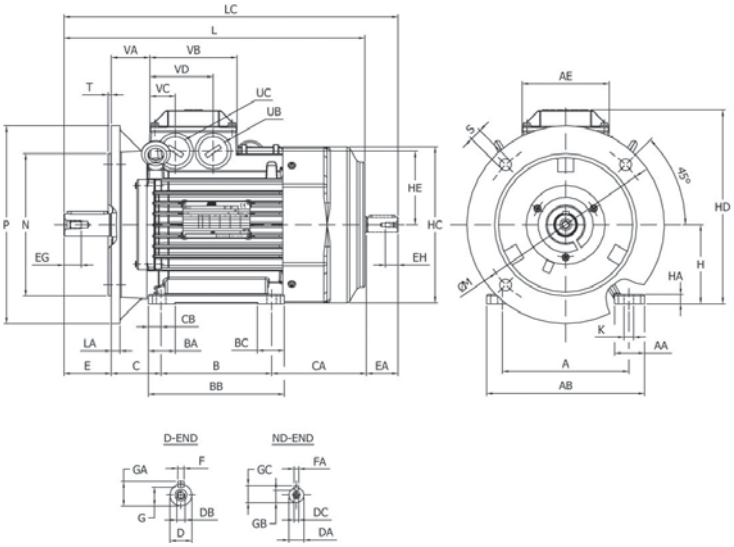

Foot- and flange-mounted motor; IM B34 (IM 2101), IM 2102, small flange

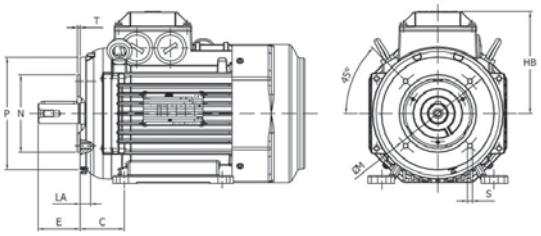

M000444

IM B35 (IM 2001), IM 2002; IM B34 (IM 2101), IM 2102

Motor size	A	AA	AB	AE	AF	B	BA	BB	BC	C	CA	CB	D-Tol.	DA	DB	DC	E	EA	EG	EH
71	112	24	136	105	139	90	24	110	24	45	104	10	14-j6	11	M5	M4	30	23	12.5	10
80	125	28	154	105	157	100	28	125	28	50	136	12.5	19-j6	14	M6	M5	40	30	16	12.5
90S	140	30	170	118	177	100	30	150	55	56	156.5	12.5	24-j6	14	M8	M5	50	30	19	12.5
90L	140	30	170	118	177	125	30	150	55	56	131.5	12.5	24-j6	14	M8	M5	50	30	19	12.5
100	160	38	200	118	197	140	34	172	34	63	123	16	28-j6	19	M10	M6	60	40	22	16
112	190	41	230	118	197	140	34	172	34	70	138	16	28-j6	19	M10	M6	60	40	22	16
132S	216	47	268.5	169	261	140	40	212	76	89	228	16	38-k6	24	M12	M8	80	50	28	19
132M	216	47	268.5	169	261	178	40	212	76	89	190	16	38-k6	24	M12	M8	80	50	28	19

Motor size	F	FA	G	GA	GB	GC	H	HA	HC	HD	HE	K	L	LC	UB	UC	VA	VB	VC	VD
71	5	4	11	16	8.5	12.5	71	9	151	178	62	7	264	292	M16x1.5	M16x1.5	30	105	31.5	73.5
80	6	5	15.5	21.5	11	16	80	10	168	195	69	10	321	356	M25x1.5	M25x1.5	32	105	32	74
90	8	5	20	27	11	16	90	11	189	219	79	10	357	392	M25x1.5	M25x1.5	42	118	39	81
100	8	6	24	31	15.5	21.5	100	12	217	247	94	12	381	426	M32x1.5	M32x1.5	45	118	36	84
112	8	6	24	31	15.5	21.5	112	12	229	259	94	12	403	448	M32x1.5	M32x1.5	45	118	36	84
132	10	8	33	41	20	27	132	14	272	300	116	12	533	588	M32x1.5	M32x1.5	65	169	82	130

IM B35 (IM 2001), IM 2002

Motor size	LA	M	N	P	S	T
71	9	130	110	160	10	3.5
80	10	165	130	200	12	3.5
90	10	165	130	200	12	3.5
100	11	215	180	250	15	4.0
112	11	215	180	250	15	4.0
132	12.5	265	230	300	15	4.0

IM B34 (IM 2101), IM 2102

Motor size	LA	M	N	P	S	T	S	T
71	8	85	70	105	M6	2.5	M6	2.5
80	8	100	80	120	M6	3	M6	3.0
90	10	115	95	140	M8	3	M8	3.0
100	10	130	110	160	M8	3.5	M8	3.5
112	10	130	110	160	M8	3.5	M8	3.5
132	12	165	130	200	M10	3.5	M10	3.5

Tolerances:

A,B	+ - 0.8	H	+0 -0.5
D, DA	ISO j6	N	ISO j6
F, FA	ISO h9	C, CA	+- 0.8

Above table gives the main dimensions in mm. For detailed drawings please see our web-pages 'www.abb.com/motors&generators' or contact ABB.

Process performance cast iron motors and premium efficiency motors

Sizes 160-250

Dimension drawings

Foot-mounted: IM B3 (IM 1001), IM B6 (IM 1051), IM B7 (IM 1061), IM B8 (IM 1071), IM V5 (IM 1011), IM V6 (IM 1031)

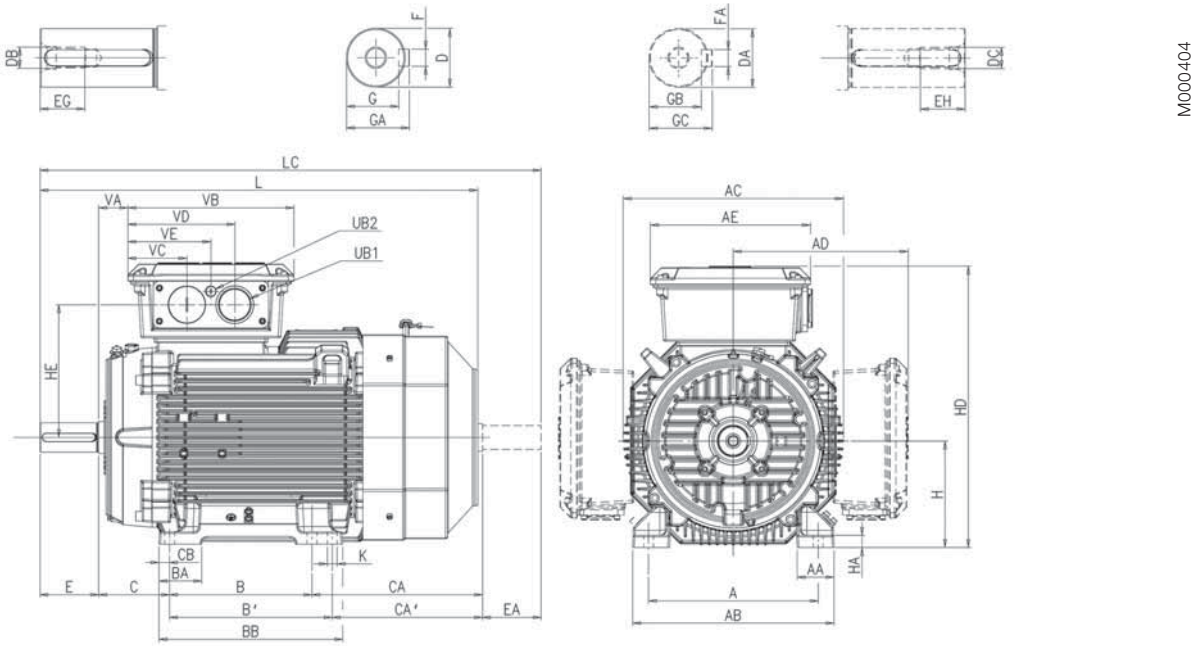

Motor size	Poles	A	AA	AB	AC	AD	AE	B	B'	BA	BB	C	CA	CA'	CB	D	DA	DB	DC	E	EA	EG	EH
160 [1]	2-8	254	67	310	338	261	257	210	254	69	294	108	164	126	20	42	32	M16	M12	110	80	36	28
160 [2]	2-8	254	67	310	338	261	257	210	254	69	294	108	262	224	20	42	32	M16	M12	110	80	36	28
180	2-8	279	67	340	381	281	257	241	279	68	317	121	263	225	19	48	32	M16	M12	110	80	36	28
200	2-8	318	69	378	413	328	300	267	305	80	345	133	314	276	20	55	45	M20	M16	110	110	42	36
225	2	356	84	435	460	348	300	286	311	69	351	149	314	289	20	55	55	M20	M20	110	110	42	42
225	4-8	356	84	435	460	348	300	286	311	69	351	149	314	289	20	60	55	M20	M20	140	110	42	42
250	2	406	92	480	508	376	300	311	349	69	392	168	281	243	23	60	55	M20	M20	140	110	42	42
250	4-8	406	92	480	508	376	300	311	349	69	392	168	281	243	23	65	55	M20	M20	140	110	42	42

Motor size	Poles	F	FA	G	GA	GB	GC	H	HA	HD	HE	K	L	LC	UB1	UB2	VA	VB	VC	VD	VE
160 [1]	2-8	12	10	37	45	27	35	160	23	421	195	14.5	584	671.5	M40	M16	49	257	95	162	129
160 [2]	2-8	12	10	37	45	27	35	160	23	421	195	14.5	681	768.5	M40	M16	49	257	95	162	129
180	2-8	14	10	42.5	51.5	27	35	180	23	461	215	14.5	726	815	M40	M16	62	257	95	162	129
200	2-8	16	14	49	59	39.5	48.5	200	23	528	249	18.5	821	934	M63	M16	55	311	111	201	156
225	2	16	16	49	59	49	59	225	23	573	269	18.5	849	971	M63	M16	48	311	111	201	156
225	4-8	18	16	53	64	49	59	225	23	573	269	18.5	879	1001	M63	M16	48	311	111	201	156
250	2	18	16	53	64	49	59	250	23	626	297	24.0	884	1010	M63	M16	48	311	111	201	156
250	4-8	18	16	58	69	49	59	250	23	626	297	24.0	884	1010	M63	M16	48	311	111	201	156

Tolerances

A, B	ISO js14
C, CA	± 0.8
D, DA	ISO k6 < Ø 50mm
	ISO m6 > Ø 50mm
F, FA	ISO h9
H	+0 -0.5

M3BP:

1) MLA-2, MLB-2, MLC-2, MLA-4, MLA-6, MLA-8 and MLB 8-poles
2) MLD-2, MLE-2, MLB-4, MLC-4, MLD-4, MLB-6, MLC-6 and MLC-8 poles

M4BP:

1) MLA-2
2) MLB-2, MLC-2, all 4- and 6-poles

Above table gives the main dimensions in mm. For detailed drawings please see our web-pages 'www.abb.com/motors&generators' or contact ABB.

Process performance cast iron motors and premium efficiency motors

Sizes 160-250

Dimension drawings

Flange-mounted; IM B5 (IM 3001), V1 (IM 3011), V3 (IM 3031) and IM B14 (IM 3601), V18 (IM 3611), V19 (IM 3631)

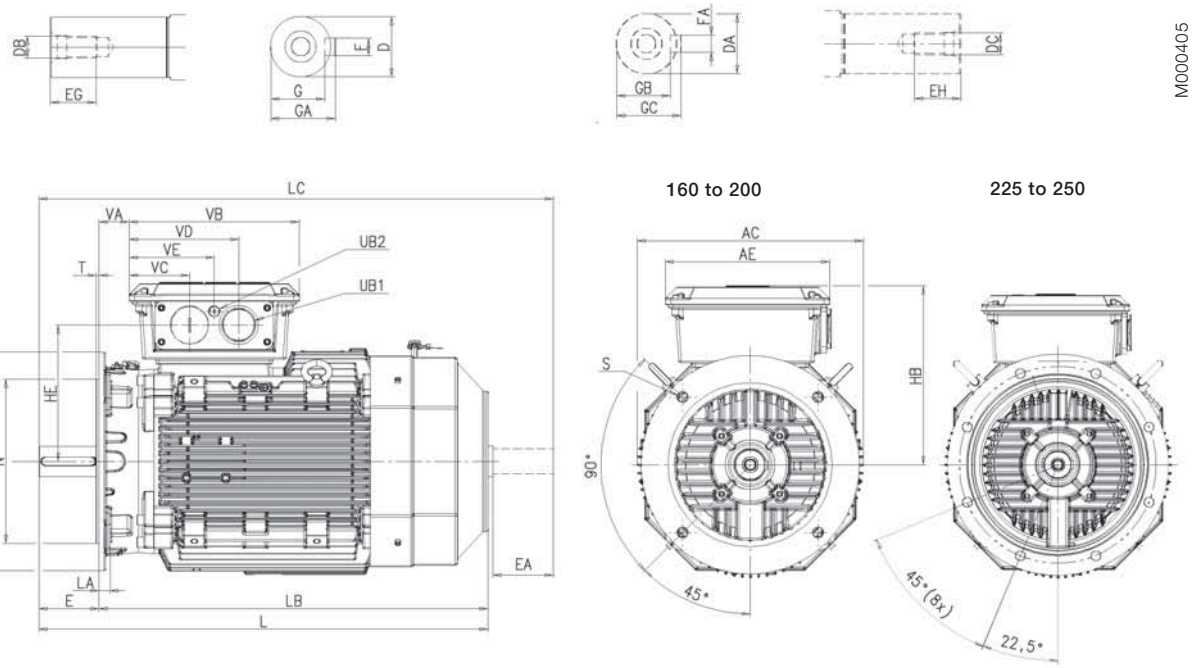

Motor size	Poles	AC	AE	D	DA	DB	DC	E	EA	EG	EH	F	FA	G	GA	GB	GC	HB	HE
160 [1]	2-8	338	257	42	32	M16	M12	110	80	36	28	12	10	37	45	27	35	261	195
160 [2]	2-8	338	257	42	32	M16	M12	110	80	36	28	12	10	37	45	27	35	261	195
180	2-8	381	257	48	32	M16	M12	110	80	36	28	14	10	42.5	51.5	27	35	281	215
200	2-8	413	300	55	45	M20	M16	110	110	42	36	16	14	49	59	39.5	48.5	328	249
225	2	460	300	55	55	M20	M20	110	110	42	42	16	16	49	59	49	59	348	269
225	4-8	460	300	60	55	M20	M20	140	110	42	42	18	16	53	64	49	59	325	269
250	2	508	300	60	55	M20	M20	140	110	42	42	18	16	53	64	49	59	376	297
250	4-8	508	300	65	55	M20	M20	140	110	42	42	18	16	58	69	49	59	376	297

Motor size	Poles	L	LA	LB	LC	M	N	P	S	T	UB1	UB2	VA	VB	VC	VD	VE
160 [1]	2-8	584	20	474	671.5	300	250	350	19	5	M40	M16	49	257	95	162	129
160 [2]	2-8	681	20	571	768.5	300	250	350	19	5	M40	M16	49	257	95	162	129
180	2-8	726	15	616	815	300	250	350	19	5	M40	M16	62	257	95	162	129
200	2-8	821	20	711	934	350	300	400	19	5	M63	M16	55	311	111	201	156
225	2	849	20	739	971	400	350	450	19	5	M63	M16	48	311	111	201	156
225	4-8	879	20	739	1001	400	350	450	19	5	M63	M16	48	311	111	201	156
250	2	884	24	744	1010	500	450	550	19	5	M63	M16	48	311	111	201	156
250	4-8	884	24	744	1010	500	450	550	19	5	M63	M16	48	311	111	201	156

Tolerances

D, DA	ISO k6 < Ø 50mm
	ISO m6 > Ø 50mm
F, FA	ISO h9
N	ISO j6

M3BP:

[1] MLA-2, MLB-2, MLC-2, MLA-4, MLA-6, MLA-8 and MLB 8-poles

[2] MLD-2, MLE-2, MLB-4, MLC-4, MLD-4, MLB-6, MLC-6 and MLC-8 poles

M4BP:

[1] MLA-2

[2] MLB-2, MLC-2, all 4- and 6-poles

Above table gives the main dimensions in mm. For detailed drawings please see our web-pages 'www.abb.com/motors&generators' or contact ABB.

Process performance cast iron motors and premium efficiency motors
Dimension drawings

Foot- and flange-mounted: IM B35 (IM 2001), IM V15 (IM 2011), IM V36 (IM 2031)

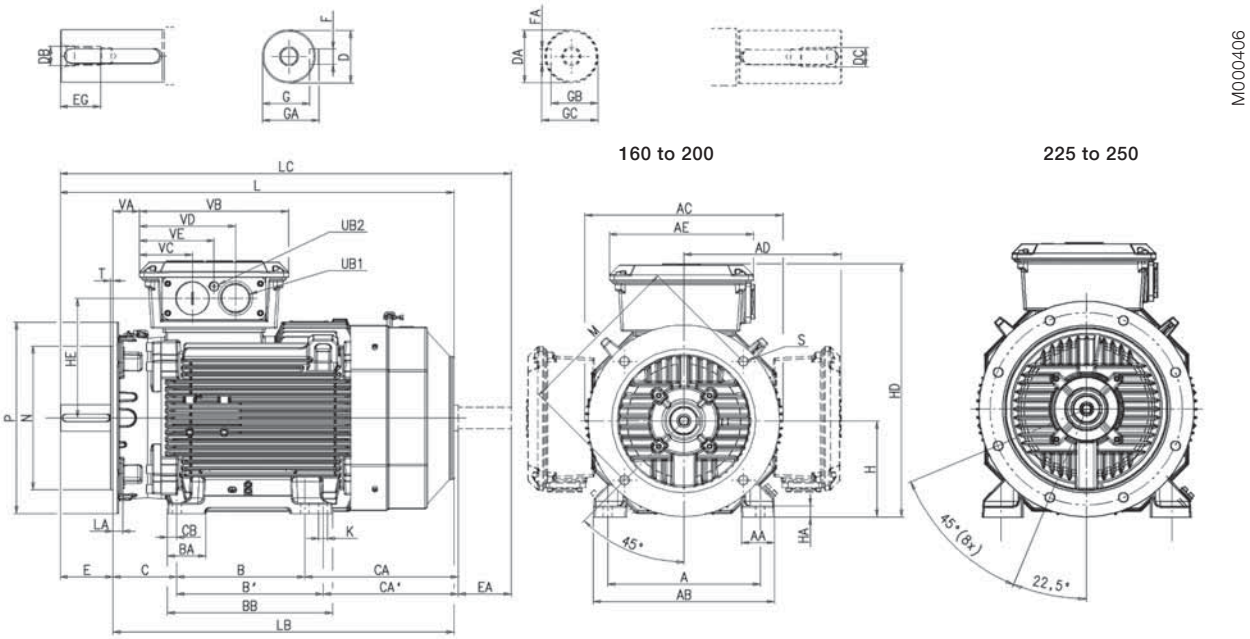

Motor size	Poles	A	AA	AB	AC	AD	AE	B	B'	BA	BB	C	CA	CA'	CB	D	DA	DB	DC	E	EA	EG	EH	F	FA	G
160 [1]	2-8	254	67	310	338	261	257	210	254	69	294	108	164	126	20	42	32	M16	M12	110	80	36	28	12	10	37
160 [2]	2-8	254	67	310	338	261	257	210	254	69	294	108	262	224	20	42	32	M16	M12	110	80	36	28	12	10	37
180	2-8	279	67	340	381	281	257	241	279	68	317	121	263	225	19	48	32	M16	M12	110	80	36	28	14	10	42.5
200	2-8	318	69	378	413	328	300	267	305	80	345	133	314	276	20	55	45	M20	M16	110	110	42	36	16	14	49
225	2	356	84	435	460	348	300	286	311	69	351	149	314	289	20	55	55	M20	M20	110	110	42	42	16	16	49
225	4-8	356	84	435	460	348	300	286	311	69	351	149	314	289	20	60	55	M20	M20	140	110	42	42	18	16	53
250	2	406	92	480	508	376	300	311	349	69	392	168	281	243	23	60	55	M20	M20	140	110	42	42	18	16	53
250	4-8	406	92	480	508	376	300	311	349	69	392	168	281	243	23	65	55	M20	M20	140	110	42	42	18	16	58

Motor size	Poles	GA	GB	GC	H	HA	HD	HE	K	L	LA	LB	LC	M	N	P	S	T	UB1	UB2	VA	VB	VC	VD	VE
160 [1]	2-8	45	27	35	160	23	421	195	14.5	584	20	474	671.5	300	250	350	19	5	M40	M16	49	257	95	162	129
160 [2]	2-8	45	27	35	160	23	421	195	14.5	681	20	571	768.5	300	250	350	19	5	M40	M16	49	257	95	162	129
180	2-8	51.5	27	35	180	23	461	215	14.5	726	15	616	815	300	250	350	19	5	M40	M16	62	257	95	162	129
200	2-8	59	39.5	48.5	200	23	528	249	18.5	821	20	711	934	350	300	400	19	5	M63	M16	55	311	111	201	156
225	2	59	49	59	225	23	573	269	18.5	849	20	739	971	400	350	450	19	5	M63	M16	48	311	111	201	156
225	4-8	64	49	59	225	23	573	269	18.5	879	20	739	1001	400	350	450	19	5	M63	M16	48	311	111	201	156
250	2	64	49	59	250	23	626	297	24.0	884	24	744	1010	500	450	550	19	5	M63	M16	48	311	111	201	156
250	4-8	69	49	59	250	23	626	297	24.0	884	24	744	1010	500	450	550	19	5	M63	M16	48	311	111	201	156

Tolerances

A, B	ISO js14
C, CA	± 0.8
D, DA	ISO k6 < Ø 50 mm ISO m6 > Ø 50 mm
F, FA	ISO h9
H	+0 -0.5
N	ISO j6

M3BP:

1) MLA-2, MLB-2, MLC-2, MLA-4, MLA-6, MLA-8 and MLB 8-poles
2) MLD-2, MLE-2, MLB-4, MLC-4, MLD-4, MLB-6, MLC-6 and MLC-8 poles

M4BP:

1) MLA-2
2) MLB-2, MLC-2, all 4- and 6-poles

Above table gives the main dimensions in mm. For detailed drawings please see our web-pages 'www.abb.com/motors&generators' or contact ABB.

Process performance cast iron motors and premium efficiency motors

Sizes 280-315

Dimension drawings

Foot-mounted: IM B3 (IM 1001), IM B6 (IM 1051), IM B7 (IM 1061), IM B8 (IM 1071), IM V5 (IM 1011), IM V6 (IM 1031)

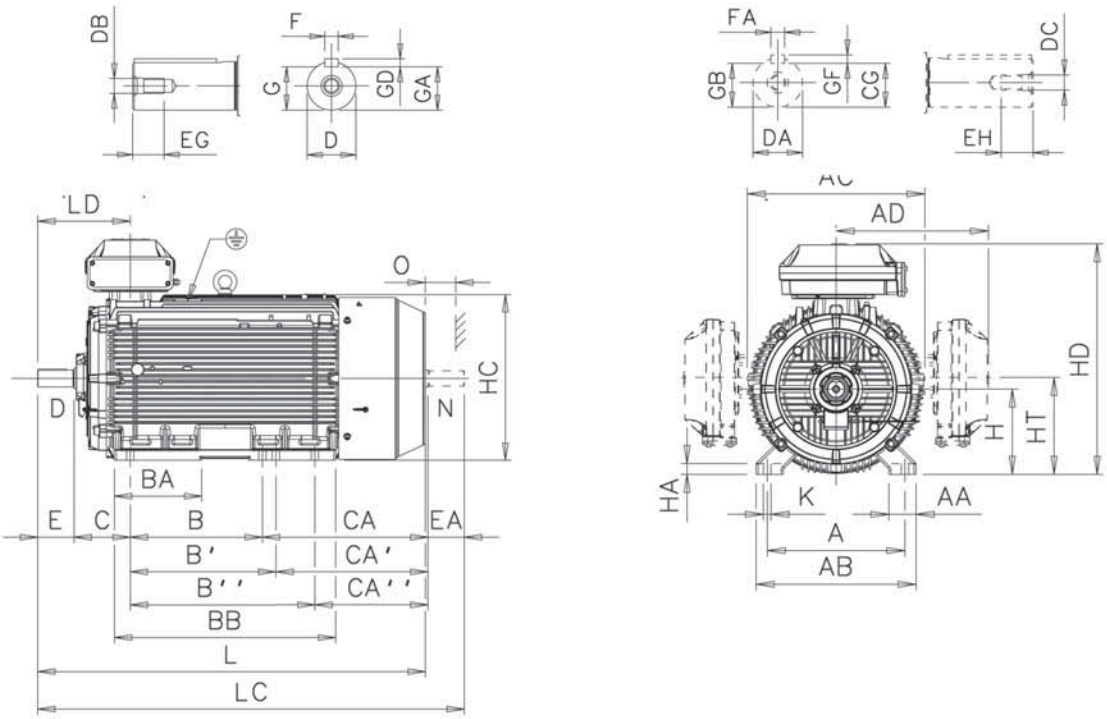

Motor size	Poles	A	AA	AB	AC	AD[1]	AD[2]	B	B'	B"	BA	BB	C	CA	CA'	CA ''	D	DA	DB	DC	E	EA	EG	EH
280 SM_	2	457	84	530	577	481	-	368	419	-	147	506	190	400	349	-	65	60	M20	M20	140	140	40	40
	4-12	457	84	530	577	481	-	368	419	-	147	506	190	400	349	-	75	65	M20	M20	140	140	40	40
315 SM_	2	508	100	590	654	545	-	406	457	-	180	558	216	420	369	-	65	60	M20	M20	140	140	40	40
	4-12	508	100	590	654	545	-	406	457	-	180	558	216	420	369	-	80	75	M20	M20	170	140	40	40
315 ML_	2	508	100	590	654	545	-	457	508	-	212	669	216	480	429	-	65	60	M20	M20	140	140	40	40
	4-12	508	100	590	654	545	-	457	508	-	212	669	216	480	429	-	90	75	M24	M20	170	140	48	40
315 LK_	2	508	100	590	654	562	576	508	560	710	336	851	216	635	583	433	65	60	M20	M20	140	140	40	40
	4-12	508	100	590	654	562	576	508	560	710	336	851	216	635	583	433	90	75	M24	M20	170	140	48	40

Motor size	Poles	F	FA	G	GA	GB	GC	GD	GF	H	HA	HC	HD[1] top-m.	HD[2] top-m.	HT	K	L	LC top-m.	LD side-m.	LD	O
280 SM_	2	18	18	58	69	53	64	11	11	280	31	564	762	-	337.5	24	1088	1238	336	539	100
	4-12	20	18	67.5	79.5	58	69	12	11	280	31	564	762	-	337.5	24	1088	1238	336	539	100
315 SM_	2	18	18	58	69	53	64	11	11	315	40	638	852	-	375	28	1174	1322	356	585	115
	4-12	22	20	71	85	67.5	79.5	14	12	315	40	638	852	-	375	28	1204	1352	386	615	115
315 ML_	2	18	18	58	69	53	64	11	11	315	40	638	852	-	375	28	1285	1433	356	640	115
	4-12	25	20	81	95	67.5	79.5	14	12	315	40	638	852	-	375	28	1315	1463	386	670	115
315 LK_	2	18	18	58	69	53	64	11	11	315	40	638	870	880	359	28	1491	1639	356	721	115
	4-12	25	20	81	95	67.5	79.5	14	12	315	40	638	852	880	359	28	1521	1669	386	751	115

Tolerances:

A, B	± 0,8
C, CA	± 0.8
D	ISO k6 < Ø 50mm
	ISO m6 > Ø 50mm
F	ISO h9
H	+0 -0.5
N	ISO j6

[1] Terminal box 370

[2] Terminal box 750

Above table gives the main dimensions in mm. For detailed drawings please see our web-pages 'www.abb.com/motors&generators' or contact ABB.

Process performance cast iron motors and premium efficiency motors

Sizes 280-315

Dimension drawings

Flange-mounted; IM B5 (IM3001), V1 (IM3011), V3 (IM3031) and IM B14 (IM3601), V18 (IM3611), V19 (IM3631)

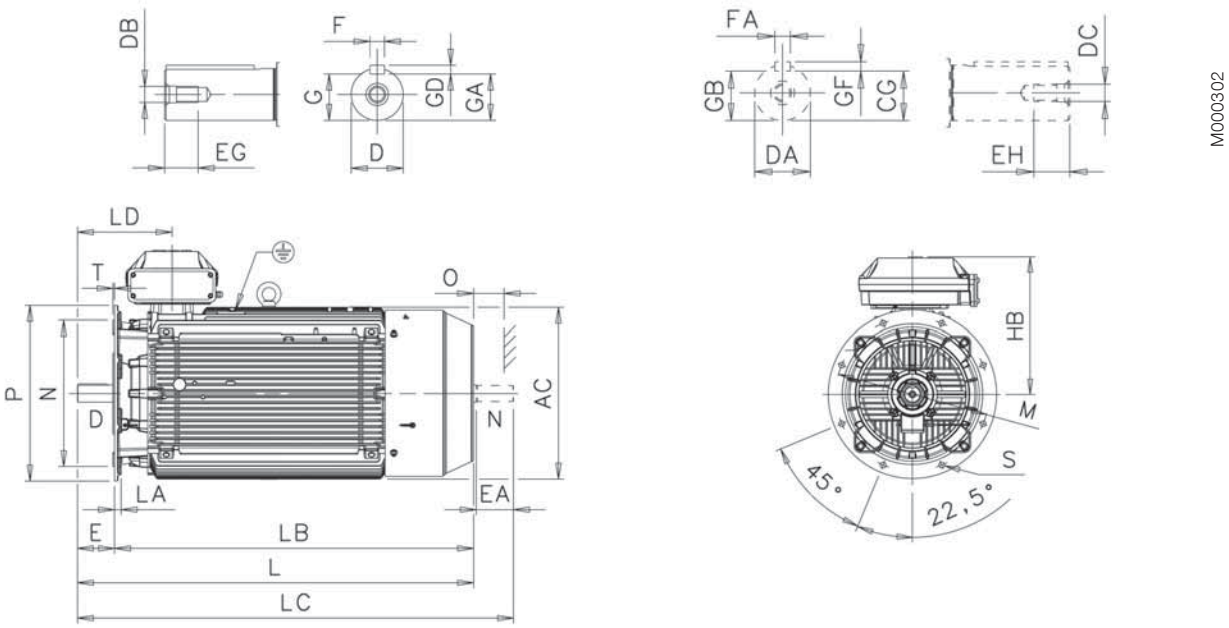

Motor size	Poles	AC	D	DA	DB	DC	E	EA	EG	EH	F	FA	G	GA	GB	GC	GD	GF
280 SM_	2	577	65	60	M20	M20	140	140	40	40	18	18	58	69	53	64	11	11
	4-12	577	75	65	M20	M20	140	140	40	40	20	18	67.5	79.5	58	69	12	11
315 SM_	2	645	65	60	M20	M20	140	140	40	40	18	18	58	69	53	64	11	11
	4-12	645	80	75	M20	M20	170	140	40	40	22	20	71	85	67.5	79.5	14	12
315 ML_	2	645	65	60	M20	M20	140	140	40	40	18	18	58	69	53	64	11	11
	4-12	645	90	75	M24	M20	170	140	48	40	25	20	81	95	67.5	79.5	14	12
315 LK_	2	645	65	60	M20	M20	140	140	40	40	18	18	58	69	53	64	11	11
	4-12	645	90	75	M24	M20	170	140	48	40	25	20	81	95	67.5	79.5	14	12

Motor size	Poles	HB[1)]	HB[2)]	L	LA	LB	LC	LD	M	N	O	P	S	T
280 SM_	2	482	-	1088	23	948	1238	336	500	450	100	550	18	5
	4-12	482	-	1088	23	948	1238	336	500	450	100	550	18	5
315 SM_	2	537	-	1174	25	1034	1322	356	600	550	115	660	23	6
	4-12	537	-	1204	25	1034	1352	386	600	550	115	660	23	6
315 ML_	2	537	-	1285	25	1145	1433	356	600	550	115	660	23	6
	4-12	537	-	1315	25	1145	1463	386	600	550	115	660	23	6
315 LK_	2	537	565	1491	25	1306	1639	356	600	550	115	660	23	6
	4-12	537	565	1521	25	1306	1669	386	600	550	115	660	23	6

Tolerances:

D, DA	ISO m6
F, FA	ISO h9
N	ISO j6 (280 SM_)
	ISO js6 (315_)

[1)] Terminal box 370

[2)] Terminal box 750

Above table gives the main dimensions in mm. For detailed drawings please see our web-pages 'www.abb.com/motors&generators' or contact ABB.

Process performance cast iron motors and premium efficiency motors

Sizes 280-315

Dimension drawings

Foot- and flange-mounted: IM B35 (IM 2001), IM V15 (IM 2011), IM V36 (IM 2031)

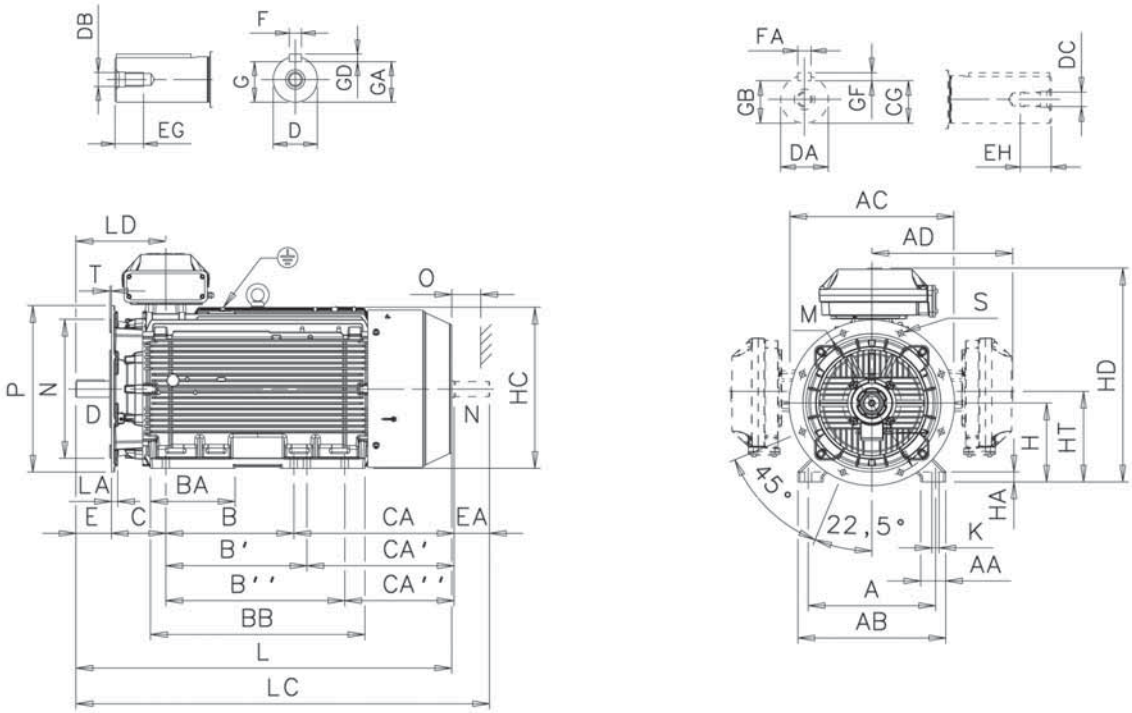

Motor size	Poles	A	AA	AB	AC	AD[1]	AD[2]	B	B '	B"	BA	BB	C	CA	CA '	CA"	D	DA	DB	DC	E	EA	EG	EH	F	FA	G
280 SM_	2	457	84	530	577	481	-	368	419	-	147	506	190	400	349	-	65	60	M20	M20	140	140	40	40	18	18	58
	4-12	457	84	530	577	481	-	368	419	-	147	506	190	400	349	-	75	65	M20	M20	140	140	40	40	20	18	67.5
315 SM_	2	508	100	590	654	545	-	406	457	-	180	558	216	420	369	-	65	60	M20	M20	140	140	40	40	18	18	58
	4-12	508	100	590	654	545	-	406	457	-	180	558	216	420	369	-	80	75	M20	M20	170	140	40	40	22	20	71
315 ML_	2	508	100	590	654	545	-	457	508	-	212	669	216	480	429	-	65	60	M20	M20	140	140	40	40	18	18	58
	4-12	508	100	590	654	545	-	457	508	-	212	669	216	480	429	-	90	75	M24	M20	170	140	48	40	25	20	81
315 LK_	2	508	100	590	654	562	576	508	560	710	336	851	216	635	583	433	65	60	M20	M20	140	140	40	40	18	18	58
	4-12	508	100	590	654	562	576	508	560	710	336	851	216	635	583	433	90	75	M24	M20	170	140	48	40	25	20	81

Motor size	Poles	GA	GB	GC	GD	GF	H	HA	HC	HD[1] top-m.	HD[2] top-m.	HT	K	L	LA	LC top-m.	LD	LD side-m.	M	N	P	S	T	O
280 SM_	2	69	53	64	11	11	280	31	564	762	-	337.5	24	1088	23	1238	336	539	500	450	550	18	5	100
	4-12	79.5	58	69	12	11	280	31	564	762	-	337.5	24	1088	23	1238	336	539	500	450	550	18	5	100
315 SM_	2	69	53	64	11	11	315	40	638	852	-	375	28	1174	25	1322	356	585	600	550	660	23	6	115
	4-12	85	67.5	79.5	14	12	315	40	638	852	-	375	28	1204	25	1352	386	615	600	550	660	23	6	115
315 ML_	2	69	53	64	11	11	315	40	638	852	-	375	28	1285	25	1433	356	640	600	550	660	23	6	115
	4-12	95	67.5	79.5	14	12	315	40	638	852	-	375	28	1315	25	1463	386	670	600	550	660	23	6	115
315 LK_	2	69	53	64	11	11	315	40	638	852	880	359	28	1491	25	1639	356	721	600	550	660	23	6	115
	4-12	95	67.5	79.5	14	12	315	40	638	852	880	359	28	1521	25	1669	386	751	600	550	660	23	6	115

Tolerances:

A, B	± 0,8
D	ISO m6
F	ISO h9
H	+0 -1.0
N	ISO j6 (280 SM_)
	ISO js6 (315_)
C	± 0.8

[1] Terminal box 370

[2] Terminal box 750

Above table gives the main dimensions in mm. For detailed drawings please see our web-pages 'www.abb.com/motors&generators' or contact ABB.

Process performance cast iron motors and premium efficiency motors

Sizes 355-450

Dimension drawings

Foot-mounted: IM B3 (IM 1001), IM B6 (IM 1051), IM B7 (IM 1061), IM B8 (IM 1071), IM V5 (IM 1011), IM V6 (IM 1031)

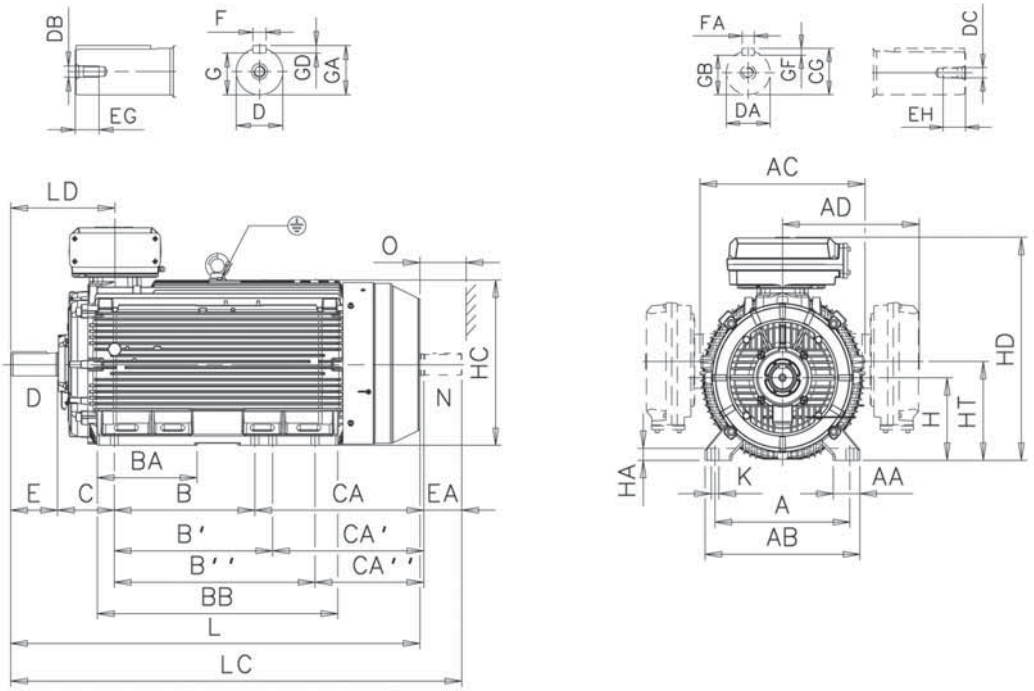

Motor size	Poles	A	AA	AB	AC	AD[1]	AD[2]	B	B'	B"	BA	BB	C	CA	CA'	CA"	D	DA	DB	DC	E	EA	EG	EH
355 SM_	2	610	120	700	746	604	618	500	560	-	221	722	254	525	465	-	70	70	M20	M20	140	140	42	40
	4-12	610	120	700	746	604	618	500	560	-	221	722	254	525	465	-	100	90	M24	M24	210	170	51	51
355 ML_	2	610	120	700	746	604	618	560	630	-	267	827	254	500	570	-	70	70	M20	M20	140	140	42	40
	4-12	610	120	700	746	604	618	560	630	-	267	827	254	500	570	-	100	90	M24	M24	210	170	51	51
355 LK_[4]	2	610	120	700	746	604	618	630	710	900	447	1077	254	750	670	480	70	70	M20	M20	140	140	42	40
	4-12	610	120	700	746	604	618	630	710	900	447	1077	254	750	670	480	100	90	M24	M24	210	170	51	51
400 L_	2	710	150	840	834	-	660	900	1000	-	410	1156	224	567	467	-	80	70	M20	M20	170	140	42	40
	4-12	710	150	840	834	-	660	900	1000	-	410	1156	224	567	467	-	110	90	M24	M24	210	170	50	51
400 LK_[4]	2	686	150	840	834	-	660	710	800	900	410	1156	280	701	611	511	80	70	M20	M20	170	140	42	40
	4-12	686	150	840	834	-	660	710	800	900	410	1156	280	701	611	511	100	90	M24	M24	210	170	50	51
450 L_	2	800	160	950	966	-	-	1000	1120	1250	450	1420	250	-	-	-	80	-	M20	-	170	-	42	-
	4-12	800	160	950	966	-	-	1000	1120	1250	450	1420	250	737	617	487	120	100	M24	M24	210	210	50	50

Motor size	Poles	F	FA	G	GA	GB	GC	GD	GF	H	HA	HC	HD[1] top-m.	HD[2] top.m.	HD[3] top.m.	HD side-m.	K	L	LC	LD top-m.	LD side-m.	O
355 SM_	2	20	20	62.5	74.5	62.5	74.5	12	12	355	45	725	944	958	-	843	35	1409	1559	397	679	130
	4-12	28	25	90	106	81	95	16	14	355	45	725	944	958	-	843	35	1479	1659	467	750	130
355 ML_	2	20	20	62.5	74.5	62.5	74.5	12	12	355	45	725	944	958	-	843	35	1514	1664	397	732	130
	4-12	28	25	90	106	81	95	16	14	355	45	725	944	958	-	843	35	1584	1764	467	802	130
355 LK_[4]	2	20	20	62.5	74.5	62.5	74.5	12	12	355	45	725	944	958	-	843	35	1764	1914	397	857	130
	4-12	28	25	90	106	81	95	16	14	355	45	725	944	958	-	843	35	1834	2014	467	927	130
400 L_	2	22	20	71	85	67.5	79.5	12	12	400	45	814	-	1045	-	943	35	1851	2001	458	909	150
	4-12	28	25	90	116	81	95	16	14	400	45	814	-	1045	-	943	35	1891	2071	498	949	150
400 LK_[4]	2	22	20	71	85	67.5	79.5	14	12	400	45	814	-	1045	-	943	35	1851	2001	458	909	150
	4-12	28	25	90	106	81	95	16	14	400	45	814	-	1045	-	943	35	1891	2071	498	949	150
450 L_	2	22	-	71	85	-	-	14	-	450	81	933	-	1169	1231	-	42	2147	-	485	-	180
	4-12	32	28	109	127	100	116	18	16	450	81	933	-	1169	1231	-	42	2187	2407	525	-	180

Tolerances:

A, B	± 0,8
D, DA	ISO m6
F, FA	ISO h9
H	+0 -1.0
N	ISO j6
C, CA	± 0.8

[1] Terminal box 370
[2] Terminal box 750
[3] Terminal box 1200
[4] Size with alternative dimensions

Above table gives the main dimensions in mm. For detailed drawings please see our web-pages 'www.abb.com/motors&generators' or contact ABB.

Process performance cast iron motors and premium efficiency motors

Sizes 355-450

Dimension drawings

Flange-mounted; IM B5 (IM 3001), IM V1 (IM 3011), IM V3 (IM 3031), IM B14 (IM 3601), IM V18 (IM 3611) and IM V19 (IM 3631)

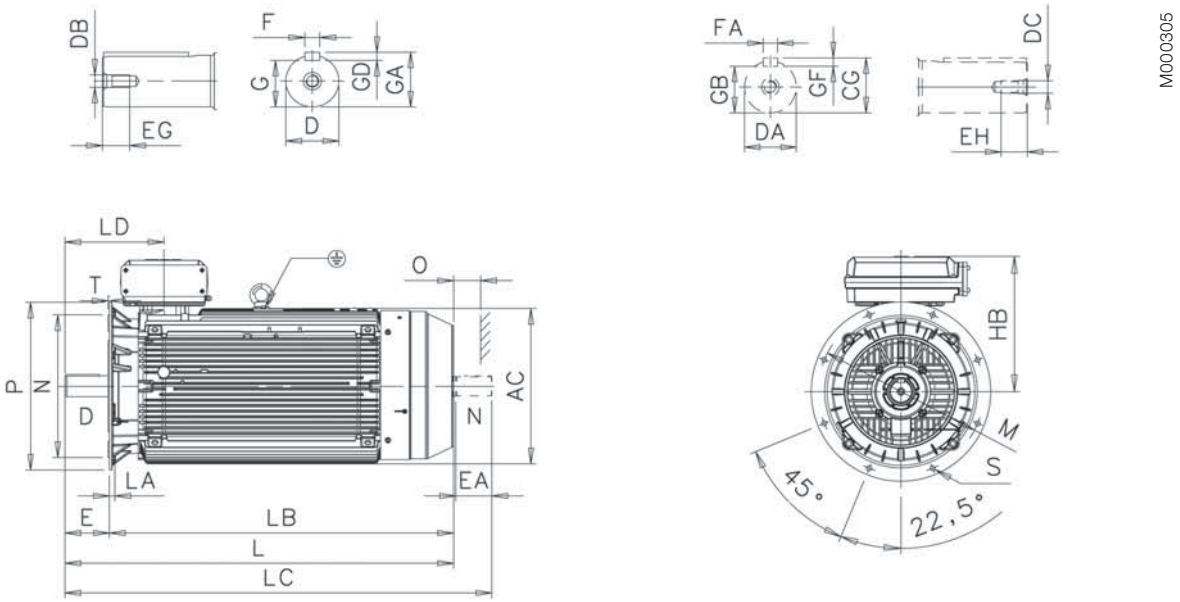

Motor size	Poles	AC	D	DA	DB	DC	E	EA	EG	EH	F	FA	G	GA	GB	GC	GD	GF
355 SM_	2	740	70	70	M20	M20	140	140	42	40	20	20	62.5	74.5	62.5	74.5	12	12
	4-12	740	100	90	M24	M24	210	170	51	51	28	25	90	106	81	95	16	14
355 ML_	2	740	70	70	M20	M20	140	140	42	40	20	20	62.5	74.5	62.5	74.5	12	12
	4-12	740	100	90	M24	M24	210	170	51	51	28	25	90	106	81	95	16	14
355 LK_ [4]	2	740	70	70	M20	M20	140	140	42	40	20	20	62.5	74.5	62.5	74.5	12	12
	4-12	740	100	90	M24	M24	210	170	51	51	28	25	90	106	81	95	16	14
400 L_	2	814	80	70	M20	M20	170	140	42	40	22	20	71	85	67.5	79.5	12	12
	4-12	814	110	90	M24	M24	210	170	50	50	28	25	100	116	81	95	16	14
400 LK [4]	2	814	80	70	M20	M20	170	140	42	40	22	20	71	85	67.5	79.5	12	12
	4-12	814	100	90	M24	M24	210	170	50	50	28	25	90	106	81	95	16	14
450 L_	2	966	80	-	M20	-	170	-	42	-	22	-	71	85	-	-	14	-
	4-12	966	120	100	M24	M24	210	210	50	50	32	28	109	127	100	116	18	16

Motor size	Poles	HB[1]	HB[2]	HB[3]	L	LA	LB	LC	LD[1]	LD[2]	LD[3]	M	N	O	P	S	T
355 SM_	2	589	603	-	1409	25	1269	1559	397	397	-	740	680	130	800	23	6
	4-12	589	603	-	1479	25	1269	1659	467	467	-	740	680	130	800	23	6
355 ML_	2	589	603	-	1514	25	1374	1664	397	397	-	740	680	130	800	23	6
	4-12	589	603	-	1584	25	1374	1764	467	467	-	740	680	130	800	23	6
355 LK_ [4]	2	589	603	-	1764	25	1624	1914	397	397	-	740	680	130	800	23	6
	4-12	589	603	-	1834	25	1624	2014	467	467	-	740	680	130	800	23	6
400 L_	2	-	645	-	1851	26	1681	2001	458	458	-	940	880	150	1000	28	6
	4-12	-	645	-	1891	26	1681	2071	498	498	-	940	880	150	1000	28	6
400 LK_ [4]	2	-	645	-	1851	26	1681	2001	458	458	-	740	680	150	800	24	6
	4-12	-	645	-	1891	26	1681	2071	498	498	-	740	680	150	800	24	6
450 L_	2	-	719	843	2147	33	1937	-	-	485	520	1080	1000	180	1150	28	6
	4-12	-	719	843	2187	33	1977	2407	-	525	560	1080	1000	180	1150	28	6

Tolerances:

D, DA	ISO m6
N	ISO js6 (315_)
F, FA	ISO h9

[1] Terminal box 370
[2] Terminal box 750
[3] Terminal box 1200
[4] Size with alternative dimensions

Above table gives the main dimensions in mm. For detailed drawings please see our web-pages 'www.abb.com/motors&generators' or contact ABB.

Process performance cast iron motors and premium efficiency motors
Dimension drawings

Foot- and flange-mounted: IM B35 (IM 2001), IM V15 (IM 2011), IM V36 (IM 2031)

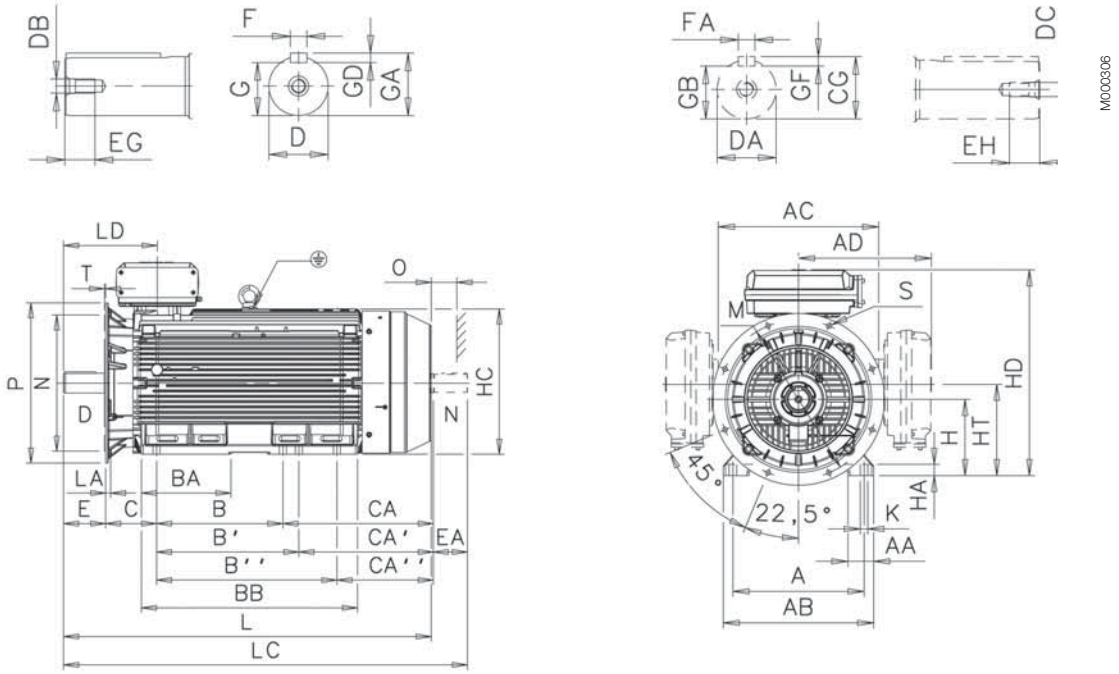

Motor size	Poles	A	AA	AB	AC	AD[1]	AD[2]	B	B'	B"	BA	BB	C	CA	CA'	CA"	D	DA	DB	DC	E	EA	EG	EH	F	FA	G
355 SM_	2	610	120	700	746	604	618	500	560	-	221	722	254	525	465	-	70	70	M20	M20	140	140	42	40	20	20	62.5
	4-12	610	120	700	746	604	618	500	560	-	221	722	254	525	465	-	100	90	M24	M24	210	170	51	48	28	25	90
355 ML_	2	610	120	700	746	604	618	560	630	-	267	827	254	500	570	-	70	70	M20	M20	140	140	42	40	20	20	62.5
	4-12	610	120	700	746	604	618	560	630	-	267	827	254	500	570	-	100	90	M24	M24	210	170	51	48	28	25	90
355 LK_[4]	2	610	120	700	746	604	618	630	710	900	447	1077	254	750	670	480	70	70	M20	M20	140	140	42	40	20	20	62.5
	4-12	610	120	700	746	604	618	630	710	900	447	1077	254	750	670	480	100	90	M24	M24	210	170	51	48	28	25	90
400 L_	2	710	150	840	834	-	660	900	1000	-	410	1156	224	567	467	-	80	70	M20	M20	170	140	42	40	22	20	71
	4-12	710	150	840	834	-	660	900	1000	-	410	1156	224	567	467	-	110	90	M24	M24	210	170	50	50	28	25	100
400 LK_[4]	2	686	150	840	834	-	660	710	800	900	410	1156	280	701	611	511	80	70	M20	M20	170	140	42	40	22	20	71
	4-12	686	150	840	834	-	660	710	800	900	410	1156	280	701	611	511	100	90	M24	M24	210	170	50	50	28	25	90
450 L_	2	800	160	950	966	-	-	1000	1120	1250	450	1420	250	-	-	-	80	-	M20	-	170	-	-	-	22	-	71
	4-12	800	160	950	966	-	-	1000	1120	1250	450	1420	250	737	617	487	120	100	M24	M24	210	210	50	50	32	28	109

Motor size	Poles	GA	GB	GC	GD	GF	H	HA	HC	HD[1] top-m.	HD[2] top-m.	HD[3] top-m.	HD side-m.	K	L	LA	LC	LD[1] top-m.	LD[2] top-m.	LD[3] top-m.	LD side-m.	M	N	O	P	S	T
355 SM_	2	74.5	62.5	74.5	12	12	355	45	725	944	958	-	843	35	1409	25	1559	397	397	-	679	740	680	130	800	23	6
	4-12	106	81	95	16	14	355	45	725	944	958	-	843	35	1479	25	1659	467	467	-	750	740	680	130	800	23	6
355 ML_	2	74.5	62.5	74.5	12	12	355	45	725	944	958	-	843	35	1514	25	1664	397	397	-	732	740	680	130	800	23	6
	4-12	106	81	95	16	14	355	45	725	944	958	-	843	35	1584	25	1764	467	467	-	802	740	680	130	800	23	6
355 LK_[4]	2	74.5	62.5	74.5	12	12	355	45	725	944	958	-	843	35	1764	25	1914	397	397	-	857	740	680	130	800	23	6
	4-12	106	81	95	16	14	355	45	725	944	958	-	843	35	1834	25	2014	467	467	-	927	740	680	130	800	23	6
400 L_	2	85	67.5	79.5	12	12	400	45	814	-	1045	-	943	35	1851	26	2001	458	458	-	909	940	880	150	1000	28	6
	4-12	116	81	95	16	14	400	45	814	-	1045	-	943	35	1891	26	2071	498	498	-	949	940	880	150	1000	28	6
400 LK_[4]	2	85	67.5	79.5	12	12	400	45	814	-	1045	-	943	35	1851	26	2001	458	458	-	909	740	680	150	800	24	6
	4-12	106	81	95	16	14	400	45	814	-	1045	-	943	35	1891	26	2071	498	498	-	949	740	680	150	800	24	6
450 L_	2	85	-	-	14	-	450	81	933	-	1169	1293	-	42	2147	33	-	-	485	520	-	1080	1000	180	1150	28	6
	4-12	127	100	116	18	16	450	81	933	-	1169	1293	-	42	2187	33	2407	-	525	560	-	1080	1000	180	1150	28	6

Tolerances:

A, B	± 0,8
D, DA	ISO m6
F, FA	ISO h9
H	+0 -1.0
N	ISO js6
C	± 0,8

1) Terminal box 370
2) Terminal box 750
3) Terminal box 1200
4) Size with alternative dimensions

Above table gives the main dimensions in mm. For detailed drawings please see our web-pages 'www.abb.com/motors&generators' or contact ABB.

Accessories

Built-on-brake (variant code 412)

Brake design
Electromagnetic disc brakes are applied by the action of a set of springs and are released when voltage is applied to the brake coil.

This means that the motor will brake automatically in case of any voltage failure, as significant safety feature. The brake is always functional, irrespective of the mounting position of the brake motor.

Detailed view
1. Connection box, (with rectifier, optional)
2. Manual release (optional)
3. Modified N-end shield
4. V-ring seal
5. Adapter flange for brake
6. Brake
7. V-ring seal
8. Fan cover
9. Fan

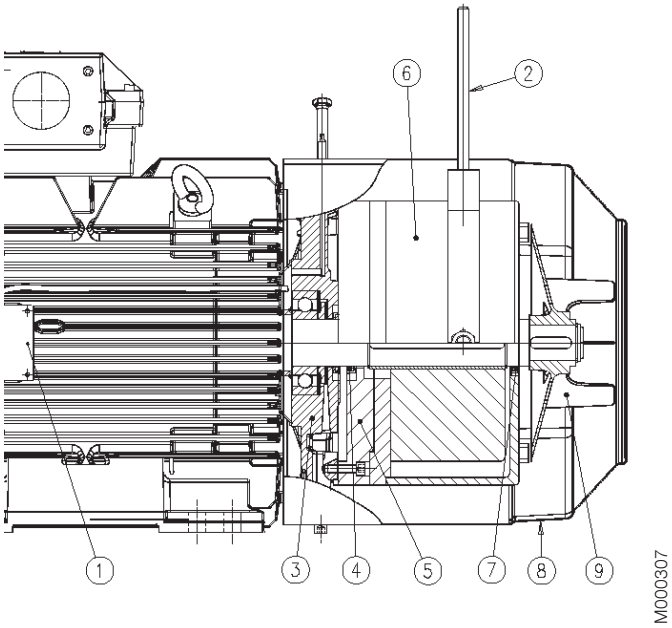

Brake disc
The brake linings are made from asbestos-free material. The linings are highly resistant to wear and have excellent thermal conductivity, giving consistent performance across the temperature range.

The brake disc withstands large number of braking operations and is insensitive to dust and moisture.

Please note that changing between a used and a new disc will result in a different braking torque.

Replacing the brake disc
The brake disc must be replaced when reaching the minimum permissible lining thickness stated; please see the data provided by the brake manufacturer.

Rectifier
The rectifier is a device for DC brake applications. It is highly resistant to temperature as well as to voltage peaks, and it includes an additional protection of the auxiliary contact of contactor. With a compact design, it can be placed inside the motor terminal box. Since the rectifier is optional, please state this option when ordering if required.

Torque adjustment
Reducing the torque of the brake is possible with most brake types, please see manufacturer's catalogue or contact ABB for more information.

Manual release
The manual release has two options, it either comes with screws (standard) or with a manual release. The manual release overrides the action of the brake springs as long as it is applied.

Manual release is an option available for all motor sizes, however it cannot be used in combination with the Pintsch Bamag brakes type SFB.

Brake rating plates
The same brake rating plates are used as for the standard M3BP motors i.e. stainless steel, with an additional marking of code 412, which stands for 'built-on-brake'.

Available brake types

The motors available in this section can be fitted with recommended brakes from either Pintsch Bamag or Stromag according to the table below; other brakes can be ordered on request.

Pintsch & Bamag, type KFB, IP 67, 110 V DC Electromagnetic Double-Disc Spring-Applied Brake

Brake type	Brake torque Nm	For motor size
KFB 10	100	160
KFB 16	160	160 - 180
KFB 25	250	180 - 225
KFB 40	400	200 - 250
KFB 63	630	225 - 280
KFB 1000	1000	280 - 315
KFB 1600	1600	315 - 355
On request		355 - 450

Pintsch & Bamag, type SFB, IP 67, 110 V DC Electromagnetic Double-Disc Spring-Applied Brake

Brake type	Brake torque Nm	For motor size
SFB 16	160	200 - 225
SFB 25	250	200 - 250
SFB 40	400	225 - 250
SFB 63	630	250
SFB 100	1000	280 - 315
SFB 160	1600	315 - 355
SFB 250	2500	355 - 400
SFB 400	4000	400
On request		450

Stromag, type NFF, 110 V DC, IP66

Brake type	Brake torque Nm	For motor size
NFF 10	100	160
NFF 16	160	160 - 180
NFF 25	250	180 - 225
NFF 40	400	200 - 250
NFF 63	630	225 - 250
For sizes 280-450 on request		

For brake types for frame sizes 71 to 132 please contact ABB.

Options for the brake

On new manufacture only

- Hand release (not possible for Pintsch Bamag brake type SFB)
- Rectifier
- Micro switch
- Proximity switch (not possible for Stromag brake)
- Standstill heater

On request

- Special brake voltage
- Raised brake torque
- Combination with brake, separate cooling fan and/or tacho
- For other variants, please contact ABB.

Dimensions of brake motor

Foot-mounted:
IM B3 (IM1001), IM B6 (IM 1051), M B7 (IM1061), IM B8 (IM 1071), IM V5 (IM 1011), IM V6 (IM 1031)

Flange-mounted:
IM B5 (IM 3001), IM V1 (IM 3011), IM V3 (IM 3031), IM B14 (IM 3601), IM V18 (IM 3611), IM V19 (IM 3631)

Foot- and flange-mounted:
IM B35 (IM 2001), IM V15 (IM 2011), IM V36 (IM 2031)

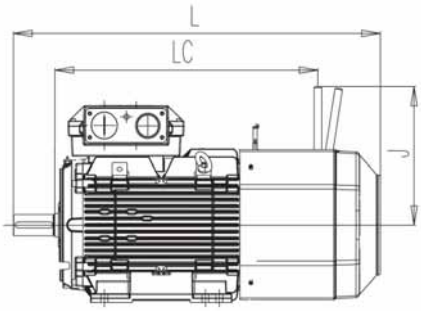

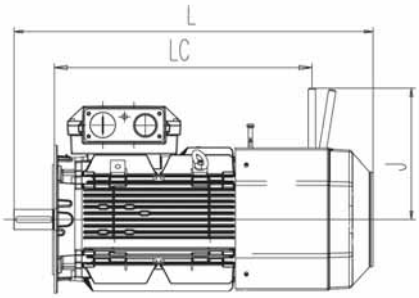

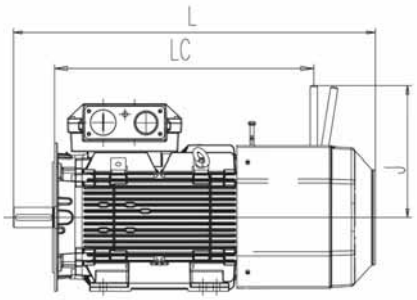

M000308

Motor		Foot-mounted			Flange-mounted			Foot- and flange-mounted		
size	Poles	L	LC	J	L	LC	J	L	LC	J
160 [1]	2-8	773	511	372	773	511	372	773	511	372
160 [2]	2-8	871	608	372	871	608	372	871	608	372
180	2-8	935	687	372	935	687	372	935	687	372
200	2-8	1011	695	460	1011	695	460	1011	695	460
225	2	1085	729	460	1085	729	460	1085	729	460
225	4-8	1115	729	460	1105	729	460	1115	729	460
250	2-8	1119	755	460	1119	755	460	1119	755	460

[1] MLA-2, MLB-2, MLC-2, MLA-4, MLA-6, MLA-8 and MLB-8 -poles
[2] MLD-2, MLE-2, MLB-4, MLC-4, MLD-4, MLB-6, MLC-6 and MLC-8 -poles

Motor sizes 280 to 450 on request.

Other dimensions same as Process performance cast iron motors sizes 180 to 250

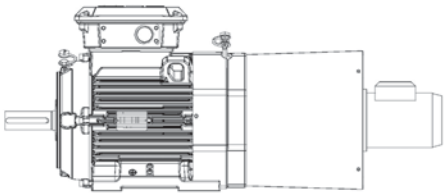

M000415

Separate motor cooling (fan axial, N-end) for cast iron motors (Variant code 183)

Main motor size	Fan motor type (at 50 Hz)	Product type	kW
M3BP 160 - 200	M2VA 63 B, 4 pole, B14	3GVA 062 002-C*A	0.18
M3BP 225 - 250	M2VA 63 B, 4 pole, B14	3GVA 062 002-C*A	0.18
M3BP 280 - 315 ML	M2VA 80 B, 4 pole, B14	3GVA 082 002-C*B	0.75
M3BP 315 LK - 355 SM	M2AA 90 L, 4 pole, B14	3GAA 092 002-C*E	1.5
M3BP 355 ML - 450 L	M2AA 100 LB, 4 pole, B14	3GAA 102 002-C*E	3.0

* = Voltage and frequency code

Frame sizes 71 to 132; please contact ABB.

Separate motor cooling (fan top or side) for cast iron motors (Variant code 422)

Main motor size	Fan motor type (at 50 Hz)	Product type	kW
M3BP 280 - 315	M2AA 90 L, 2 pole, B5	3GAA 091 002-B*E	2.2
M3BP 355 - 450 L	M2AA 100 L, 2 pole, B5	3GAA 101 001-B*E	3.0

* = Voltage and frequency code

Protective roof
Variant code 005

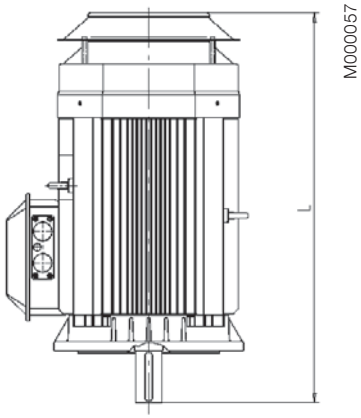

Tacho
Variant codes;
472, 473, 572 and 573

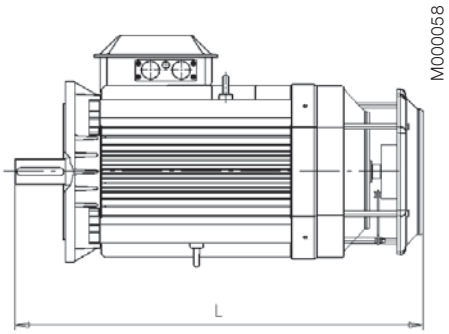

Separate cooling with or without tacho
Variant codes; 183, 474, 476, 477, 189, 574, 576 and 577

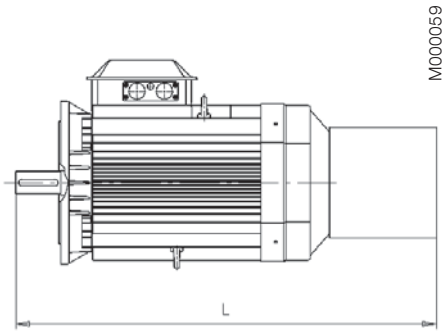

Variant codes		005	183	189	472, 473 572, 573, 658	474, 476 477, 574 576, 577
Motor size	Pole no	L	L	L	L	L
160 [1]	2-8	635	996	851	668	996
160 [2]	2-8	732	1093	948	763	1093
180	2-8	779	1142	995	811	1143
200	2-8	875	1273	1129	918	1274
225	2	902	1308	1158	945	1307
225	4-8	932	1338	1188	975	1337
250	2-8	937	1351	1203	981	1351
280SM_	2	1190	1472	NA	1184	1620
	4-12	1190	1472	NA	1184	1620
315SM_	2	1290	1552	NA	1268	1708
	4-12	1320	1582	NA	1298	1738
315ML_	2	1400	1662	NA	1378	1820
	4-12	1430	1692	NA	1408	1850
315LK_	2	1561	1920	NA	1584	2054
	4-12	1591	1950	NA	1614	2084
355SM_	2	1513	1835	NA	1504	1963
	4-12	1583	1905	NA	1574	2033
355ML_	2	1618	1986	NA	1609	2119
	4-12	1688	2056	NA	1679	2189
355LK_	2	1881	2236	NA	1899	2409
	4-12	1951	2306	NA	1929	2439
400L/LK	2	1968	2313	NA	1946	2435
	4-12	2008	2353	NA	1986	2475
450L_	2	2362	2530	NA	2260	2530
	4-12	2402	2570	NA	2300	2570

[1] 2-poles, MLA 4- and 6-poles, MLA and MLB 8-poles.
[2] High output, MLB 6-poles, MLC 8-poles

Note! Dimensions for motors with variant codes 659 and 660 on request.

Silencer for LV Process performance cast iron motor sizes 280-450

Both foot-mounted and flange-mounted motors can be fitted with a silencer to reduce the noise level by about 5-6 dB(A). The silencer is painted blue and is made of 2 mm steel sheet. The sound absorbing material is 40 mm thick polyurethane foam. On the underside there is a rubber strip to seal against the floor. The silencer fits loosely over the motor.

Dimensions of silencers for foot-mounted motors
Silencers for flange-mounted motors on request.

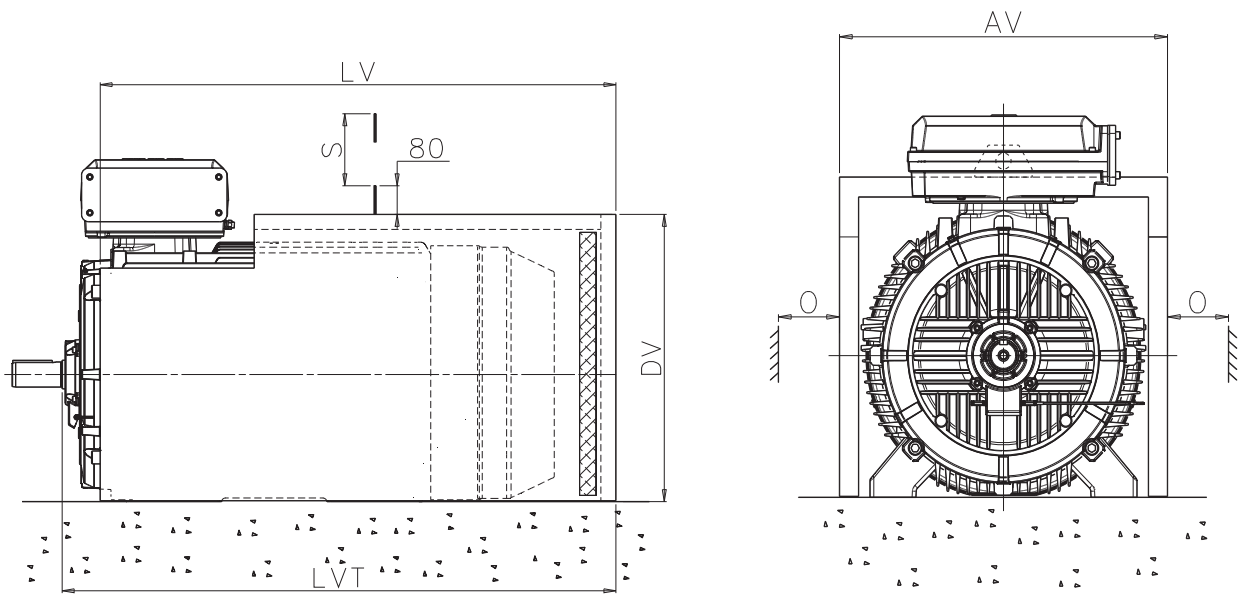

Motor size	AV	LV	LVT	DV	O [1]	S [2]	Weight kg
280SM_	681	1010	1090	616	50	762	38
315 SM_	760	1094	1191	697	60	852	47
315 ML_	760	1205	1302	697	60	852	51
315 LK_	760	1411	1508	697	60	852	58
355 SM_	850	1335	1441	777	65	958	62
355 ML_	850	1440	1546	777	65	958	67
355 LK_	850	1690	1796	777	65	958	77
400 L_	938	1750	1873	866	75	1045	88
400 LK_	938	1750	1873	866	75	1045	88
450 L_	1050	2110	2230	990	80	1045	120

[1] Clearance for motor cooling.
[2] Clearance for removal of silencer.

Note: Dimensions of silencers for smaller frame sizes on request.

Slide rails for motor sizes 160 to 250

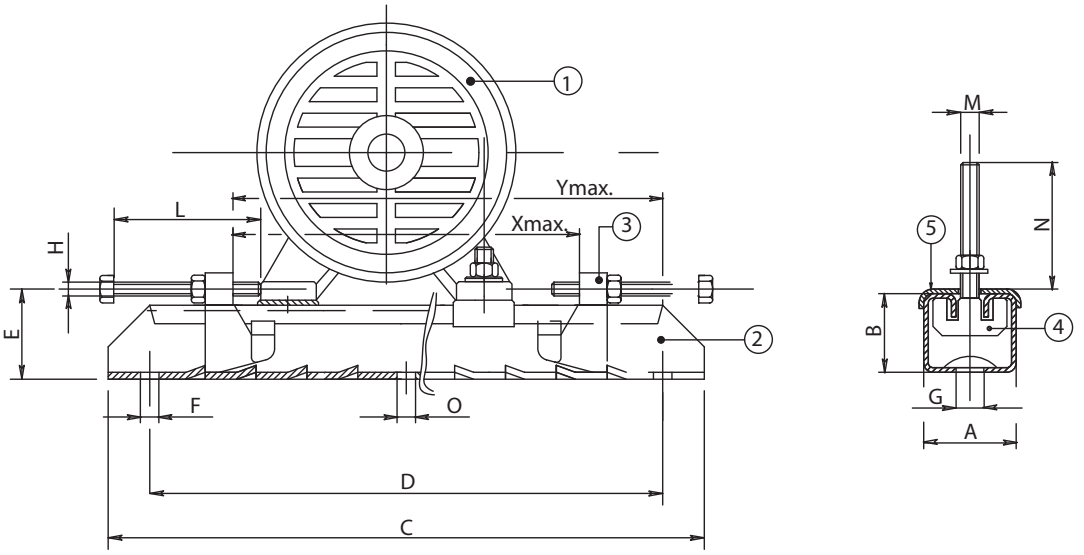

1 Motor
2 Rail
3 Movable adjusting bolt
4 Fixing bolt, motor
5 Plate

Motor size	Type	3GZV103001-	A	B	C	D	E	F	G	H	L	M	N	O	Xmax	Ymax	kg
Frame sizes 71 to 132 on request																	
160-180	TT180/12	-14	75	42	700	630	57	17	26	M12	120	M12	50	-	520	580	12.0
200-225	TT225/16	-15	82	50	864	800	68	17	27	M16	140	M16	65	17	670	740	20.4
250	TT280/20	-16	116	70	1072	1000	90	20	27	M18	150	M20	80	20	870	940	43.0

Each set includes two complete slide rails including screw for mounting the motor on the rails. Screws for mounting the rails on the foundation are not included. Slide rails are supplied with unmachined lower surfaces and should, prior to tightening down, be supported in a suitable manner.

Slide rails for motor sizes 280 to 450

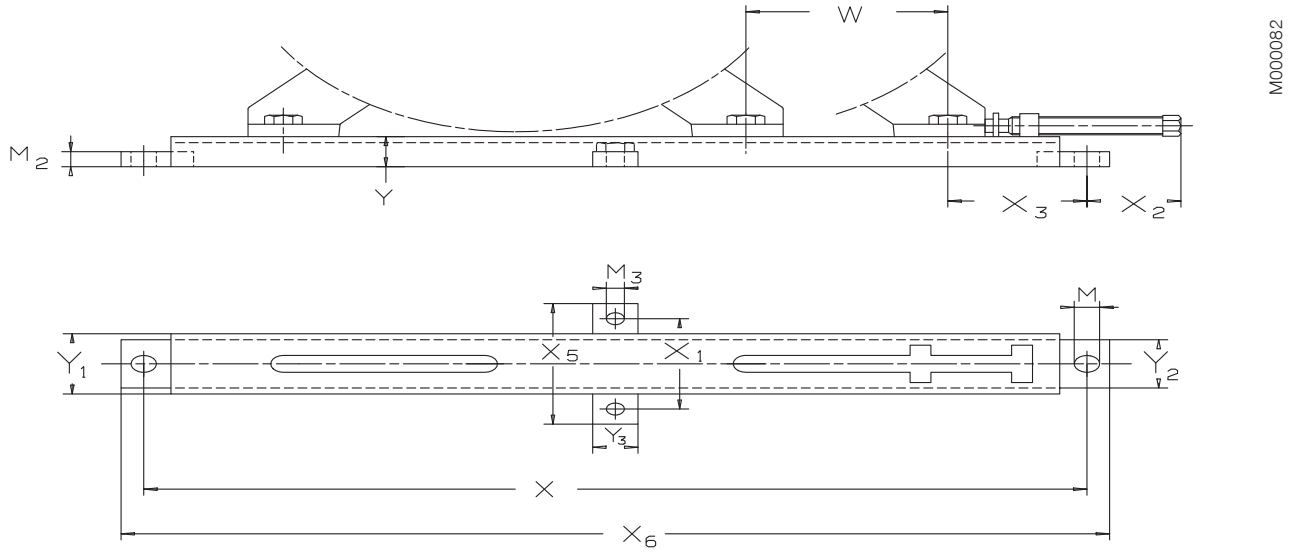

Type	Motor size	M	M2	M3	W max	X	X1	X2 max	X3 min	X5	X6	Y	Y1	Y2	Y3	Weight/ rail kg
ZHKJ 50	280	28	25	20	135	850	150	125	135	200	900	50	100	80	50	14.5
ZHKJ 63	315	28	25	20	220	1040	150	125	150	200	1090	50	100	80	50	17.5
ZHKJ 71 [1)]	355	33	30	20	275	1260	190	145	185	240	1320	60	140	120	50	31.0
ZHKJ 71 [1)]	400	33	30	20	180	1260	190	140	200	240	1320	60	140	120	50	31.0
ZHKJ 90	450	28	30	28	260	1420	240	140	210	300	1480	70	180	158	60	61.0

[1)] When mounting on a ceiling or on a wall please contact the manufacturer.

Each set includes two complete slide rails including screw for mounting the motor on the rails. Screws for mounting the rails on the foundation are not included. Slide rails are supplied with unmachined lower surfaces and should, prior to tightening down, be supported in a suitable manner.

Process performance cast iron motor construction

Typical exploded view of cast iron motors, frame size 315

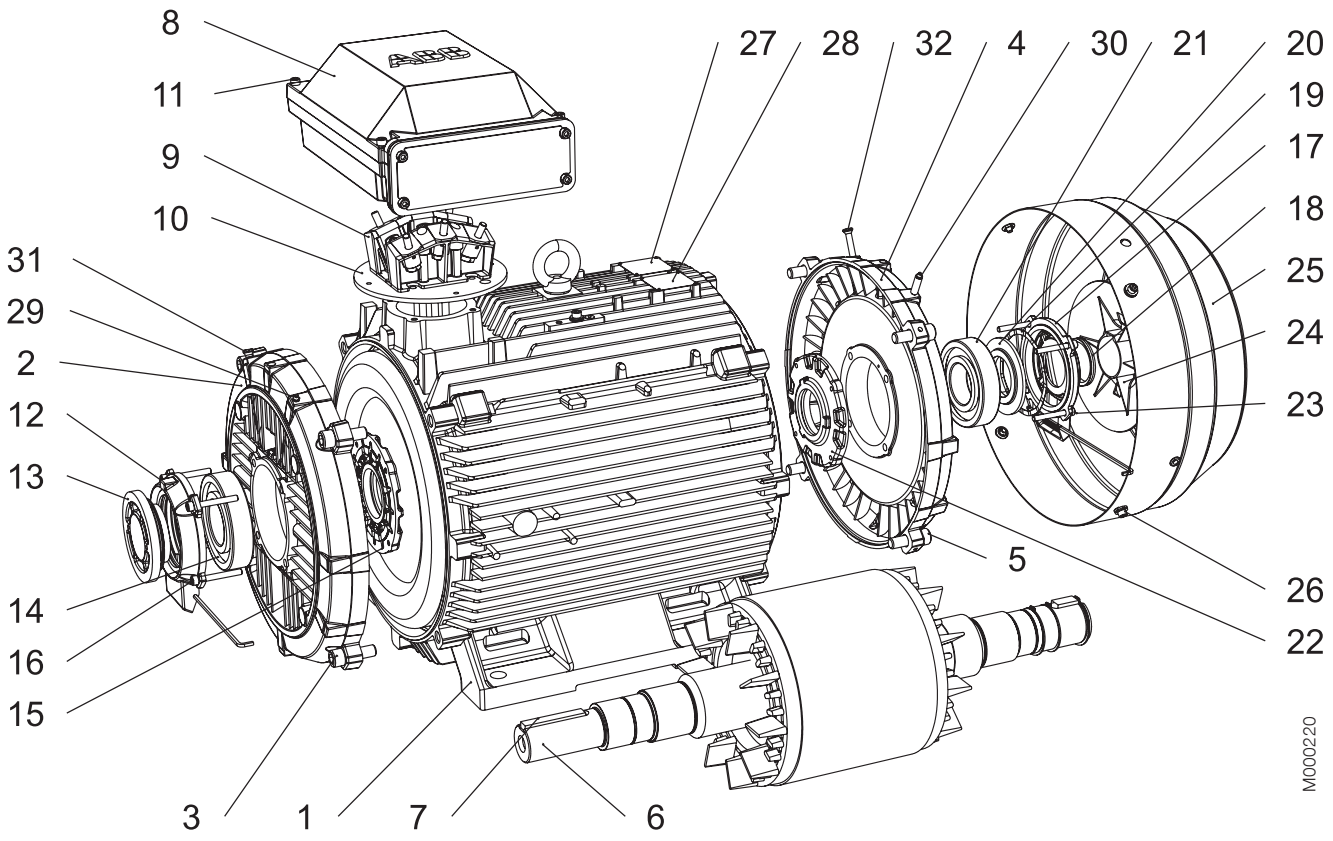

1	Stator frame
2	Endshield, D-end
3	Screws for endshield, D-end
4	Endshield, N-end
5	Screws for endshield, N-end
6	Rotor with shaft
7	Key, D-end
8	Terminal box
9	Terminal board
10	Intermediate flange
11	Screws for terminal box cover
12	Outer bearing cover, D-end
13	Valve disc with labyrinth seal, D-end; standard in 2-pole motors (V-ring in 4-8 pole)
14	Bearing, D-end
15	Inner bearing cover, D-end
16	Screws for bearing cover, D-end
17	Outer bearing cover, N-end
18	Seal, N-end
19	Wave spring
20	Valve disc, N-end
21	Bearing, N-end
22	Inner bearing cover, N-end
23	Screws for bearing cover, N-end
24	Fan
25	Fan cover
26	Screws for fan cover
27	Rating plate
28	Regreasing plate
29	Grease nipple, D-end
30	Grease nipple, N-end
31	SPM nipple, D-end
32	SPM nipple, N-end

Process performance cast iron motors in brief

Motor size		71	80	90	100	112	132
Stator	Material	Cast iron EN-GJL-150/GG 15/GRS 150					
	Paint colour shade	Munsell blue 8B 4.5/3.25 / NCS 4822 B05G					
	Surface treatment	C3 medium according to ISO/EN 12944-5					
Feet		Cast iron EN-GJL-150/GG 15/GRS 150, intergrated with stator					
Bearing end shields	Material	Cast iron EN-GJL-150/GG 15/GRS 150					
	Paint colour shade	Munsell blue 8B 4.5/3.25 / NCS 4822 B05G					
	Surface treatment	C3 medium according to ISO/EN 12944-5					
Bearings	D-end	6203-2Z/C3	6204-2Z/C3	6205-2Z/C3	6206-2Z/C3	6206-2Z/C3	6208-2Z/C3
	N-end	6202-2Z/C3	6203-2Z/C3	6204-2Z/C3	6205-2Z/C3	6205-2Z/C3	6208-2Z/C3
Axially-locked bearings	Inner bearing cover	As standard, locked at D-end					
Bearing seal	D-end	V-ring seal as standard, radial seal on request					
	N-end	Labyrinth seal					
Lubrication		Permanently lubricated shielded bearings					
		Grease temperature range -40 to +160°C					
Rating plate	Material	Stainless steel					
Terminal box	Material	Cast iron EN-GJL-150/GG 15/GRS 150					
	Surface treatment	C3 medium according to ISO/EN 12944-5					
	Screws	Steel 8.8, zinc electroplated, blue chromated Cr VI free					
Connections	Threaded openings	2 x M16	2 x M25		2 x M32		
	Max Cu-area mm2	4	6		10		
	Terminals	Cable lugs, 6 terminals					
Fan	Material	Polypropylene. Reinforced with 20% glass fibre.					
Fan cover	Material	Steel					
	Paint colour shade	Blue, Munsell 8B 4.5/3.25 / NCS 4822 B05G					
	Surface treatment	C3 medium according to ISO/EN 12944-5					
Stator winding	Material	Copper					
	Insulation	Insulation class F. Temperature rise class B, unless otherwise stated.					
	Winding protection	PTC thermostors 150°C					
Rotor winding	Material	Pressure diecast aluminum					
Balancing method		Half key balancing as standard					
Key ways		Closed key way					
Heating elements	On request	8 W	25 W				
Drain holes		Drain holes with closable plastic plugs, open on delivery					
Enclosure		IP 55 Higher protection on request					
Cooling method		IC 411					

Process performance cast iron motors in brief

Motor size		160	180	200	225	250
Stator	Material	Cast iron EN-GJL-200/GG 20/GRS 200				
	Paint colour shade	Blue, Munsell 8B 4.5/3.25 / NCS 4822 B05G				
	Corrosion class	C3 medium according to ISO/EN 12944-5				
Bearing end shields	Material	Cast iron EN-GJL-200/GG 20/GRS 200				
	Paint colour shade	Blue, Munsell 8B 4.5/3.25 / NCS 4822 B05G				
	Corrosion class	C3 medium according to ISO/EN 12944-5				
Bearings	D-end	6309/C3	6310/C3	6312/C3	6313/C3	6315/C3
	N-end	6209/C3	6209/C3	6210/C3	6212/C3	6213/C3
Axially-locked bearings	Inner bearing cover	As standard, locked at D-end				
Bearing seal		Axial seal as standard, radial seal on request				
Lubrication		Regreasable bearings, regreasing nipples M6x1				
Measuring nipples		SPM as standard				
Rating plate	Material	Stainless steel, SS-EN 10088, 0.5 mm				
Terminal box	Frame material	Cast iron EN-GJL-200/GG 20/GRS 200				
	Cover material	Cast iron EN-GJL-200/GG 20/GRS 200				
	Cover screws material	Steel 8.8, zinc electroplated and chromated				
Connections	Cable entries	2xM40, 1xM16		2xM63, 1xM16		
	Terminals	6 terminals for connection with cable lugs (not included)				
	Cable glands	Cable flanges as standard, cable glands as option				
Fan	Material	Polypropylene. Reinforced with 20% glass fibre.				
Fan cover	Material	Hot dip galvanized steel				
	Paint colour shade	Blue, Munsell 8B 4.5/3.25 / NCS 4822 B05G				
	Corrosion class	C3 medium according to ISO/EN 12944-5				
Stator winding	Material	Copper				
	Insulation	Insulation class F				
	Winding protection	3 PTC thermistors as standard, 150°C				
Rotor winding	Material	Pressure die-cast aluminum				
Balancing method		Half key balancing as standard				
Key ways		Closed key way				
Heating elements	On request	25 W	50 W	50 W	50 W	50 W
Drain holes		Standard, open on delivery				
Enclosure		IP 55, higher protection on request				
Cooling method		IC 411				

Process performance cast iron motors in brief

Motor size			280	315	355	400	450
Stator	Material		Cast iron EN-GJL-200/GG 20/GRS 200				
	Paint colour shade		Blue, Munsell 8B 4.5/3.25 / NCS 4822 B05G / RAL 5014				
	Corrosion class		C3 medium according to ISO/EN 12944-5				
Bearing end shields	Material		Cast iron EN-GJL200/GG20/GRS 200, EN-GLJ-250 /GG25/GRS 250, EN-GJS-400/GG40/GRP 400				
	Paint colour shade		Blue, Munsell 8B 4.5/3.25 / NCS 4822 B05G / RAL 5014				
	Corrosion class		C3 medium according to ISO/EN 12944-5				
Bearings	D-endc	2-pole	6316/C3	6316/C3	6316M/C3	6317M/C3	6317M/C3
		4-12 -pole	6316/C3	6319/C3	6322/C3	6324/C3	6326M/C3
	N-end	2-pole	6316/C3	6316/C3	6316M/C3	6317M/C3	6317M/C3
		4-12 -pole	6316/C3	6316/C3	6316/C3	6319/C3	6322/C3
Axially-locked bearings	Inner bearing cover		As standard, locked at D-end				
Bearing seals			V-ring or labyrinth seal as standard see chapter on Bearing seals on Process performance and Process premium efficiency				
Lubrication			Regreasable bearings, regreasing nipples, M10x1				
Measuring nipples			SPM as standard				
Rating plate	Material		Stainless steel, EN 10088, thickness 0.5 mm				
Terminal box	Frame material		Cast iron EN-GJL-250/GG 25/GRS 250				
	Cover material		Cast iron EN-GJL-250/GG 25/GRS 250				Steel
	Cover screws material		Steel 8.8, zinc electroplated and yellow chromated				
Connections	Cable-entries	2-, 4-pole	2xM63	*) 2xM63	*) 2xØ60/80	*) 2xØ80	*) 2xØ60/80
		6-pole			*) 2xØ60	*) 2xØ60/80	
				*) For detailed information of connections, please see chapter on terminal box alternatives			
	Terminals		6 terminals for connection with cable lugs (not included)				
	Cable glands		Cable glands included as standard				
Fan	Material		Glass fibre reinforced plastic or aluminum				
Fan cover	Material		Steel				
	Paint colour shade		Blue, Munsell 8B 4.5/3.25 / NCS 4822 B05G / RAL 5014				
	Corrosion class		C3 medium according to ISO/EN 12944-5				
Stator winding	Material		Copper				
	Insulation		Insulation class F				
	Winding protection		3 PTC thermistors as standard, 155°C				
Rotor winding	Material		Pressure die-cast aluminum				
Balancing method			Half key balancing as standard				
Key way			Open key way				
Heating elements	On request		60 W	2x65 W	2x65 W	2x65 W	2x100 W
Drain holes			Standard, open on delivery				
Enclosure			IP 55, higher protection on request				
Cooling method			IC 411				

Process performance aluminum motors

Totally enclosed squirrel cage three phase low voltage motors Sizes 63 to 280, 0.12 to 90 kW

www.abb.com/motors&generators
> Low voltage motors
>> Process performance motors

Mechanical design

Stator

Stator framework is made aluminum alloy. Frame sizes 63 and 180 have aluminum feet and sizes 200 to 280 have cast iron feet.

The bearing shields of sizes 160 to 280 are made of cast iron.

Drain holes

Motors that will be operated in very humid or wet environments and especially under intermittent duty should be provided with drain holes. The appropriate IM designation, such as IM 3031, is specified on the basis of the method of mounting the motor.

Motors are provided with closable plastic plugs in the drain holes (see diagram below). The plugs will be open on delivery. When mounting the motors it should be ensured that the drain holes face downwards. In the case of vertical mounting, the upper plug must be hammered home completely. In very dusty environments both plugs should be hammered home.

Motors are supplied with drain holes both on D-end and N-end.

When mounting arrangement differs from foot mounted IM B3, please mention variant code 066 when ordering. See variant codes 065, 066 and 076 under the heading “Drain holes”.

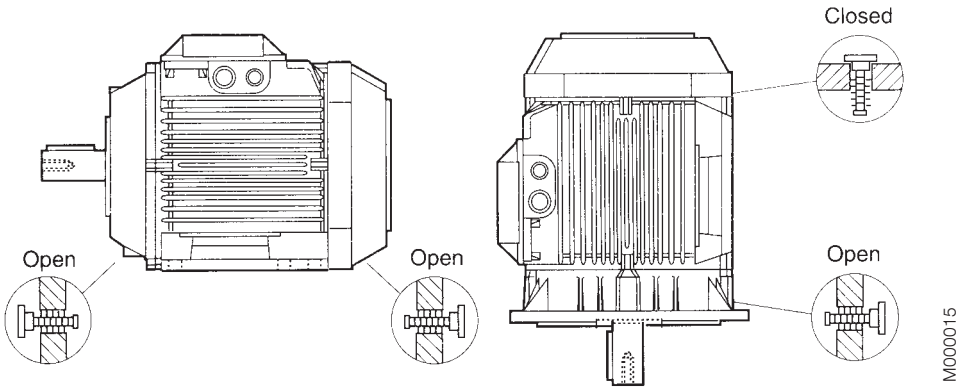

Terminal box

Sizes 63 to 180
The terminal box is made of aluminum alloy and is located on top of the stator. The lower part of the box is integrated with the stator. It is provided with two knockout openings on each side. Sizes 132 SM_ and 160-180 also have a third smaller opening. Cable glands are not included.

Sizes 200 to 280
The terminal box and cover are made of deep drawn steel and mounted on top of the stator. The box is bolted to the stator and is not rotatable. The size of the box is the same for all motors.

In the basic design the terminal box is provided with two FL 13 flange openings, one on each side. The opening on the right side, seen from the D-end, is supplied with a flange with two holes for M40 cable glands. On delivery the holes are sealed by means of plastic plugs. Cable glands are not supplied. The opening on the other side is provided with a cover flange.

The motors can also be provided with an extra large terminal box, standard for voltage code S and frame size 280. See variant code 019 under the heading “Terminal box”. This will increase the dimension HD by 32 mm. The box is supplied with two FL 21 openings. The right opening is provided with a flange with two holes for M63 cable glands. The holes are sealed by means of plastic plugs. Cable glands are not supplied. The opening on the other side is provided with a cover flange. The box can also be provided with an FL 13 opening towards the N-end.
When new motors are manufactured the terminal box can be mounted on the left or the right side. See variant codes 021 and 180 under the heading “Terminal box”.

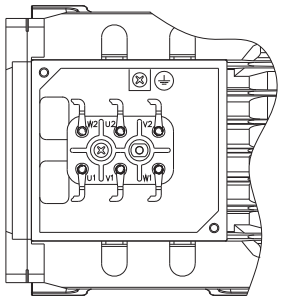

Terminal board for motor size 63

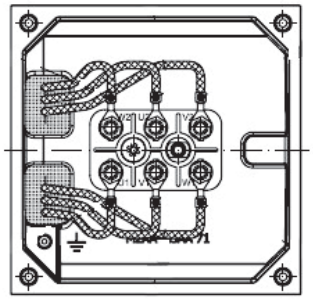

Terminal board for motor sizes 71 to 80

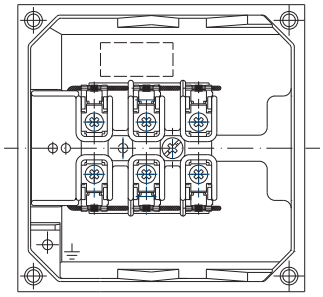

Terminal board for motor sizes 90 to 112

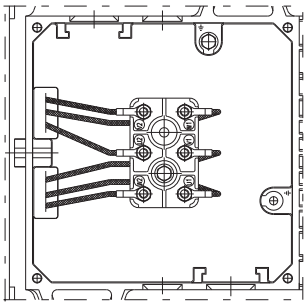

Terminal board for motor size 132

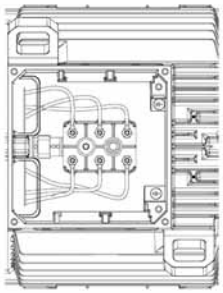

Terminal board for motor sizes 160 to 180

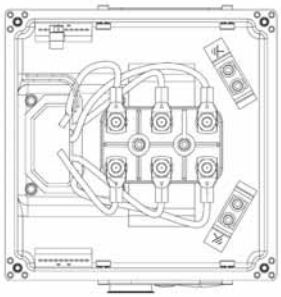

Terminal board for motor sizes 200 to 280

Connections

The terminal block is provided with six terminals for connecting Cu-cable. The terminals are marked in accordance with IEC 60034-8.

Connection openings

Motor size	Opening	Metric cable entry	Method of connection	Terminal bolt size	Maximum connectable Cu-cable area, mm²
63	Knock-out opening	1 x M16 x 1.5 1 x Pg 11	Cable lug	M4	2.5
71-80	Knock-out opening	2 x (2 x M20)	Cable lug	M4	4
90-112	Knock-out opening	2 x (M25 + M20)	Screw terminal	M4	6
132 [1]	Knock-out opening	2 x (M25 + M20)	Cable lug	M5	10
132 [2]	Knock-out opening	2 x (M40 x M32 + M12)	Cable lug	M6	35
160-180	Knock-out opening	2 x (2 x M40 + M16)	Cable lug	M6	35
200-250	2 x FL 13	1 x (2 x M40 + M16)	Cable lug	M10	70
280	2 x FL 21	1 x (2 x M63 + M16)	Cable lug	M10	70

[1] all types except [2]
[2] SM_

Dimensions for terminal box

Code 019 Larger than standard terminal box

Motor size	Dimensions	AD	HB	HD	HE
M3AA	**200 ML.**	332.5	332.5	603	240
M3AA	**225 SM.**	353	353	578	260.5
M3AA	**250 SM.**	376	376	626	283.5

Code 021 Terminal box on left-hand side seen from D end
Code 180 Terminal box on right-hand side seen from D end

Motor size	Dimensions	AD	HB	HD	HE
M3AA	**200 ML.**	332	332	532	239
M3AA	**225 SM.**	354	354	579	260.5
M3AA	**250 SM.**	377	377	627	284

Code 467 Lower than standard terminal box without screw terminals and extended rubber connection cable 2 m.

Motor size	Dimensions AD	HB	HD
160		211.5	371.5
180		226.5	406.5
200 ML.	248	248	448
225 SM.	269	269	494
250 SM.	292	292	542
280	292	292	572

Bearings

The motors are provided with bearings according to the tables below.

Greater axial forces can be tolerated if the motors are provided with angular contact ball bearings.

Note that in such cases the axial force must only operate in one direction.

Motor versions with roller bearings tolerate greater radial forces.

Basic version with deep groove ball bearings

Basic design motors			
Motor size		Foot- and flange-mounted motor D-end	N-end
63		6202-2Z/C3	6201-2Z/C3
71		6203-2Z/C3	6202-2Z/C3
80		6204-2Z/C3	6203-2Z/C3
90		6205-2Z/C3	6204-2Z/C3
100		6306-2Z/C3	6205-2Z/C3
112		6306-2Z/C3	6205-2Z/C3
132 [1]		6208-2Z/C3	6206-2Z/C3
132 [2]		6308-2Z/C3	6206-2Z/C3
160		6309-2Z/C3	6209-2Z/C3
180		6310-2Z/C3	6209-2Z/C3
200		6312-2Z/C3	6210-2Z/C3
225		6313-2Z/C3	6212-2Z/C3
250		6315-2Z/C3	6213-2Z/C3
280	2-pole	6315/C3	6213/C3
280	4-8 pole	6316/C3	6213/C3

[1] all types except [2]
[2] SM_

Alternative designs:
Version with roller bearings

It is recommended to use roller bearings in belt drives for motor sizes 160 to 280.

See variant code 037 under the heading “Bearings and lubrication”.

Motor size		D-end	N-end
90		NU 205	–
100		NU 306	–
112		NU 306	–
132 [1]		NU 208	–
132 [2]		NU 308	–
160		NU 309 ECP	–
180		NU 310 ECP	–
200		NU 312 ECP	–
225		NU 313 ECP	–
250		NU 315 ECP	–
280	2-pole	NU 315 ECP	–
280	4-8 pole	NU 316 ECP	–

[1] all types except [2]
[2] SM_

Version with angular contact ball bearings

See variant codes 058 and 059 under the heading “Bearings and lubrication”.

Motor size		D-end 058	N-end 059
90		7205 B	7204 B
100		7306 B	7205 B
112		7306 B	7205 B
132 [1]		7208 B	7206 B
132 [2]		7308 B	7206 B
160		7309 BEP	7209 BEP
180		7310 BEP	7209 BEP
200		7312 BEP	7210 BEP
225		7313 BEP	7212 BEP
250		7315 BEP	7213 BEP
280	2-pole	7315 BEP	7213 BEP
280	4-8 pole	7316 BEP	7213 BEP

[1] all types except [2]
[2] SM_

Transport locking

Motors provided with roller bearings or angular contact ball bearings are fitted with a transport lock to prevent damage to the bearings, due to vibration, during transport.

Axially-locked bearings

The table below shows which of the motor's bearings are axially locked in the bearing seat. In motor size 63 the locking is done by an internal retaining ring, in motor sizes 71 to 280 by an inner bearing cover.

Motor size	Foot-mounted motors	Flange-mounted motors Large flange	Small flange
63	On request at D-end	On request at D-end	On request at D-end
71-132	D-end [1]	D-end [1]	D-end [1]
160-280	D-end	D-end	–

[1] A spring-washer at the N-end presses the rotor toward the D-end.

Lubrication

The motors are delivered with bearing grease for use at normal temperatures in dry or humid environments.
The motors are lubricated for ambient temperatures 40°C and in some cases even above 40°C, see table 1 next page.

Motor sizes 63 to 250 are provided with shielded bearings. As an option, motor sizes 90 to 250 are provided with grease nipples for regreasing, see variant code 041 under the heading "Bearings and lubrications".

Motor size 280 is provided with grease nipples for re-greasing as standard.

The lubrication interval L_1, suitable for relubricated bearings, is defined as the number of operating hours after which 99 percent of the bearings are adequately lubricated.

Lubrication intervals and grease quantities are specified on a plate on the motor as well as in the manual supplied with the motor.

The grease lifetime L_{10}, suitable for permanent lubricated bearings, is defined as the number of operating hours after which 90 percent of the bearings are adequately lubricated. 50 percent of the bearings achieve two times this figure. Maximum lifetime, however, should be regarded as 40,000 hours.

In case of high ambient temperatures the shaft loads must be reduced compared to permissible loadings in the table (see pages 18 to 19), please contact ABB.

Table 1: Grease lifetime L_{10} in deep groove ball bearings of type 2Z in horizontally mounted motors in continuous running duty.

		Ambient temperature and rated output											
		25 °C		40 °C		50 °C		60 °C		70 °C		80 °C	
Motor	r/min	Basic	High	Basic	High	Basic	High	Basic	High	Basic	High	Basic	High
63	3000	40000	40000	40000	40000	40000	40000	31000	31000	17000	17000	9000	9000
	1500	40000	40000	40000	40000	40000	40000	33000	33000	18000	18000	9000	9000
	1000	40000	40000	40000	40000	40000	40000	33000	33000	18000	18000	9000	9000
	750	40000	40000	40000	40000	40000	40000	33000	33000	18000	18000	9000	9000
71	3000	40000	40000	40000	40000	40000	40000	27000	27000	15000	15000	8000	8000
	1500	40000	40000	40000	40000	40000	40000	33000	33000	18000	18000	9000	9000
	1000	40000	40000	40000	40000	40000	40000	33000	33000	18000	18000	9000	9000
	750	40000	40000	40000	40000	40000	40000	33000	33000	18000	18000	9000	9000
80	3000	40000	40000	40000	40000	39000	39000	23000	23000	13000	13000	7000	7000
	1500	40000	40000	40000	40000	40000	40000	33000	33000	18000	18000	9000	9000
	1000	40000	40000	40000	40000	40000	40000	33000	33000	18000	18000	9000	9000
	750	40000	40000	40000	40000	40000	40000	33000	33000	18000	18000	9000	9000
90	3000	40000	40000	40000	40000	33000	33000	20000	20000	11000	11000	6000	6000
	1500	40000	40000	40000	40000	40000	40000	33000	33000	18000	18000	9000	9000
	1000	40000	40000	40000	40000	40000	40000	33000	33000	18000	18000	9000	9000
	750	40000	40000	40000	40000	40000	40000	33000	33000	18000	18000	9000	9000
100	3000	40000	40000	39000	39000	25000	25000	15000	15000	8000	8000	4000	4000
	1500	40000	40000	40000	40000	40000	40000	30000	30000	17000	17000	9000	9000
	1000	40000	40000	40000	40000	40000	40000	33000	33000	18000	18000	9000	9000
	750	40000	40000	40000	40000	40000	40000	33000	33000	18000	18000	9000	9000
112	3000	40000	40000	39000	39000	25000	25000	15000	15000	8000	8000	4000	4000
	1500	40000	40000	40000	40000	40000	40000	30000	30000	17000	17000	9000	9000
	1000	40000	40000	40000	40000	40000	40000	33000	33000	18000	18000	9000	9000
	750	40000	40000	40000	40000	40000	40000	33000	33000	18000	18000	9000	9000
132 [1]	3000	40000	40000	33000	33000	21000	21000	13000	13000	7000	7000	4000	4000
	1500	40000	40000	40000	40000	40000	40000	26000	26000	14000	14000	7000	7000
	1000	40000	40000	40000	40000	40000	40000	33000	33000	18000	18000	9000	9000
	750	40000	40000	40000	40000	40000	40000	33000	33000	18000	18000	9000	9000
132 [2]	3000	40000	40000	31000	31000	20000	20000	12000	12000	6000	6000	3000	3000
	1500	40000	40000	40000	40000	40000	40000	24000	24000	13000	13000	7000	7000
	1000	40000	40000	40000	40000	40000	40000	33000	33000	18000	18000	9000	9000
	750	40000	40000	40000	40000	40000	40000	33000	33000	18000	18000	9000	9000
160	3000	40000	40000	40000	36000	40000	19000	26000	9000	14000	5000	8000	2000
	1500	40000	40000	40000	40000	40000	40000	40000	38000	40000	20000	37000	10000
	1000	40000	40000	40000	40000	40000	40000	40000	40000	40000	24000	40000	12000
	750	40000		40000		40000		40000		40000		40000	
180	3000	38000	38000	38000	38000	38000	38000	38000	23000	23000	12000	13000	7000
	1500	40000	40000	40000	40000	40000	24000	40000	12000	26000	6000	13000	3000
	1000	40000	40000	40000	40000	40000	40000	40000	40000	40000	24000	29000	12000
	750	40000		40000		40000		40000		37000		21000	
200	3000	27000	27000	27000	27000	27000	18000	24000	10000	14000	5000	8000	3000
	1500	40000	40000	40000	40000	40000	40000	40000	32000	40000	18000	30000	10000
	1000	40000	40000	40000	40000	40000	40000	40000	40000	40000	30000	38000	17000
	750	40000		40000		40000		40000		40000		40000	
225	3000	23000	23000	23000	18000	23000	10000	20000	6000	12000	3000	7000	1000
	1500	40000	40000	40000	40000	40000	23000	40000	12000	40000	6000	25000	3000
	1000	40000	40000	40000	40000	40000	40000	40000	40000	40000	40000	40000	27000
	750	40000		40000		40000		40000		40000		40000	
250	3000	16000	16000	16000	13000	16000	7000	12000	4000	7000	2000	4000	1000
	1500	40000	40000	40000	39000	40000	21000	40000	11000	33000	6000	19000	3000
	1000	40000	40000	40000	40000	40000	40000	40000	40000	40000	25000	36000	13000
	750	40000		40000		40000		40000		40000		40000	

[1] all types except [2]
[2] SM_
In vertically mounted motors, the grease lifetime is half the figures above.
For applications corresponding to the empty cells in the table, please contact ABB. These applications can imply reduced lifetime for bearings and winding.
Motors with roller bearings (optional) have considerably shorter grease life. For continuous operation regreasing nipples should be considered.

Lubrication intervals

ABB follows the L_1-principle in defining lubrication interval. That means that 99 percent of the motors are sure to make the interval time. The lubrication intervals can also be calculated according to the L_{10}-principle, which are normally doubled compared to L_1-values. Values available from ABB at request.

The table below gives lubrication intervals according to the L_1-principle for different speeds. The values are valid for horizontal mounted motors (B3), with about 80°C bearing temperature and using good quality grease with lithium complex soap and with mineral or PAO-oil.

For more information, see ABB's Low Voltage Motors Manual.

Frame size	Amount of grease g	3600 r/min	3000 r/min	1800 r/min	1500 r/min	1000 r/min	500-750 r/min
Ball bearings:			lubrication intervals in duty hours				
280	60	2000	3500	-	-	-	-
280	70	-	-	8000	10500	14000	17000

Frame size	Amount of grease g	3600 r/min	3000 r/min	1800 r/min	1500 r/min	1000 r/min	500-750 r/min
Roller bearings: lubrication intervals in duty hours							
280	60	1000	1750	-	-	-	-
280	70	-	-	4000	5250	7000	8500

Pulley diameter

When the desired bearing life has been determined the minimum permissible pulley diameter can be calculated with FR, according to the formula:

$$D = \frac{1.9 \bullet 10^7 \bullet K \bullet P}{n \bullet F_R}$$

where:

D = diameter of pulley, mm
P = power requirement, kW
n = motor speed, r/min.
K = belt tension factor, dependent on belt type and type of duty. A common value for V-belts is K = 2.5
F_R = permissible radial force according to the tables

Bearing life

The nominal life is defined as the number of hours that are attained or exceeded by 90 percent of identical bearings, in a large test series, under certain specified conditions. 50 percent of the bearings attain a life of as much as 5 times this figure.

The life of bearings is dependent on various factors such as bearing load, motor speed, operating temperature and the purity of the grease. The permissible radial and axial loading for different motor sizes is shown in the table on the following pages.

The table is valid for 50 Hz. For 60 Hz and/or some other bearing life than specified in the table the values are changed according to the table on the right.

The table values assume the occurrence of only radial or axial forces. In the case of simultaneous radial and axial forces information can be supplied on request. It is assumed that the radial force is applied at the end of the motor shaft.

Permissible force at changed bearing life or supply frequency

Bearing life in hours at		
50 Hz	60 Hz	Permissible force, as percentage of value in tables
25,000	21,000	100 % of value for 25,000 hours
40,000	33,000	100 % of value for 40,000 hours
63,000	52,000	86 % of value for 40,000 hours
80,000	67,000	80 % of value for 40,000 hours

Permissible loading on shaft

The tables give the permissible radial force in Newtons, assuming zero axial force, ambient temperature of 25°C.

Permissible loads of simultaneous radial and axial forces will be supplied on request.

The bearing life, L_{10}, is calculated according to SKF's theory on bearing life L_{10aah}, which also takes the purity of the grease into consideration. An adequate lubrication is a necessary prerequisite for the table at right.

If the radial force is applied between points X_0 and X_{max}, the permissible force F_R can be calculated from the following formula:

$$F_R = F_{X0} - \frac{X}{E}(F_{X0} - F_{Xmax})$$

E = length of shaft extension in basic version.

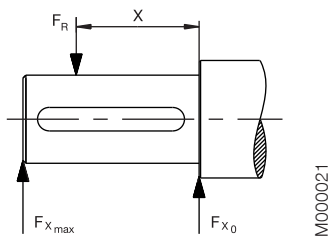

Permissible radial forces

Motor sizes 63 to 132

Motor size	No. of poles	Length of shaft extension E (mm)	Ball bearings Basic design with deep groove ball bearings 25,000 hrs FX_0 (N)	FX_{max} (N)	40,000 hrs FX_0 (N)	FX_{max} (N)
63	2	23	490	400	490	400
	4	23	490	400	490	400
	8	23	490	400	490	400
71	2	30	680	570	680	570
	4	30	680	570	680	570
	6	30	680	570	680	570
	8	30	680	570	680	570
80	2	40	630	750	930	750
	4	40	930	750	930	750
	6	40	930	750	930	750
	8	40	930	750	930	750
90	2	50	1010	810	1010	810
	4	50	1010	810	1010	810
	6	50	1010	810	1010	810
	8	50	1010	810	1010	810
100	2	60	2280	1800	2280	1800
	4	60	2280	1800	2280	1800
	6	60	2280	1800	2280	1800
	8	60	2280	1800	2280	1800

Motor size	No. of poles	Length of shaft extension E (mm)	Ball bearings Basic design with deep groove ball bearings 25,000 hrs FX_0 (N)	FX_{max} (N)	40,000 hrs FX_0 (N)	FX_{max} (N)
112	2	60	2280	1800	2280	1800
	4	60	2280	1800	2280	1800
	6	60	2280	1800	2280	1800
	8	60	2280	1800	2280	1800
132 [1]	2	80	2120	1610	2120	1610
	4	80	2120	1610	2120	1610
	6	80	2120	1610	2120	1610
	8	80	2120	1610	2120	1610
132 [2]	2	80	2600	2100	2600	2100
	4	80	2600	2100	2600	2100
	6	80	2600	2100	2600	2100
	8	80	2600	2100	2600	2100

[1] 62-series bearings
[2] 63-series bearings

Motor sizes 160 to 280

Motor size	No. of poles	Length of shaft extention E (mm)	Ball bearings Basic design with deep groove ball bearings 20,000 hrs FX_0 (N)	FX_{max}(N)	40,000 hrs FX_0 (N)	FX_{max}(N)	Roller bearings Alternative design with roller bearings 20,000 hrs FX_0 (N)	FX_{max}(N)	40,000 hrs FX_0 (N)	FX_{max}(N)
160	2	110	4760	3860	4100	3320	6580	4300	5620	4300
	4	110	5180	4200	4380	3545	7340	4300	6180	4300
	6	110	5160	4180	4360	3540	7780	4300	6500	4300
	8	110	6280	4300	5320	4300	8860	4300	7440	4300
180	2	110	6060	4960	5280 [1]	4305 [1]	7600	5500	6560	5500
	4	110	4800	3940	4020	3300	7280	5500	6140	5500
	6	110	6280	5140	5280	4380	8680	5500	7280	5500
	8	110	6960	5500	5880	4800	9440	5500	7920	5500
200	2	110	7800	6500	6760 [2]	5640 [2]	10360	8640	8880	7400
	4	110	8400	7020	7180	5980	11560	9550	9800	8180
	6	110	8960	7480	7600	6340	12480	9550	10520	8780
	8	110	10480	8740	8940	7400	14100	9550	11920	9550
225	2	110	8520	7180	7360 [3]	6200 [3]	12320	10380	10560	8900
	4	140	8380	6780	7200	5820	13380	10250	11320	9160
	6	140	10960	8860	9360	7560	15860	10250	13420	10250
	8	140	12100	9780	10340	8360	17220	10250	14580	10250
250	2	140	10480 [4]	8500 [4]	9080 [4]	7360 [4]	16220	10900	13960	10900
	4	140	10840	8780	9380	7600	18020	13800	15320	13800
	6	140	12600	10220	10700	8680	20240	13800	17140	13800
	8	140	14660	11880	12540	10160	22680	13800	19220	13800
280	2	140	6780	5500	5680	4600	16280	13200	14000	11360
	4	140	8060	6540	6640	5380	19480	15780	16540	13400
	6	140	8980	7280	7360	5960	21920	17760	18580	15060
	8	140	9180	7460	7460	6060	22240	18020	18860	15300

[1] The maximum lifetime of the grease is 38 000 h, see page 18.
[2] The maximum lifetime of the grease is 27 000 h, see page 18.
[3] The maximum lifetime of the grease is 23 000 h, see page 18.
[4] The maximum lifetime of the grease is 16 000 h, see page 18.

Permissible axial forces

The following tables give the permissible axial forces in Newtons, assuming zero radial force, ambient temperature of 25°C. The values are based on normal conditions at 50 Hz with standard bearings and calculated bearing lives of 20,000 and 40,000 hours.

At 60 Hz the values are to be reduced by 10 percent.

For two-speed motors, the values are to be based on the higher speed. The permissible loads of simultaneous radial and axial forces will be supplied on request.

Given axial forces F_{AD}, assumes D-bearing locked by means of locking ring.

Mounting arrangement IM B3

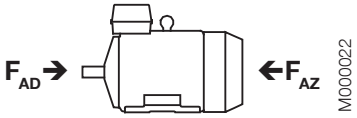

Motor size	20,000 hours								40,000 hours							
	2-pole		4-pole		6-pole		8-pole		2-pole		4-pole		6-pole		8-pole	
	F_{AD} N	F_{AZ} N	F_{AD} N	F_{AZ} N	F_{AD} N	F_{AZ} N	F_{AD} N	F_{AZ} N	F_{AD} N	F_{AZ} N	F_{AD} N	F_{AZ} N	F_{AD} N	F_{AZ} N	F_{AD} N	F_{AZ} N
63	480	125	565	165	580	190	590	195	420	105	470	115	490	145	590	205
71	625	325	780	480	890	590	985	685	515	215	630	330	710	410	780	480
80	810	470	1015	675	1170	830	1300	960	650	315	810	470	925	595	1015	675
90	885	485	1170	650	1270	870	1410	1010	720	320	945	425	1005	605	1110	710
100	1620	1120	2065	1565	2390	1890	2660	2160	1280	780	1615	1115	1860	1360	2065	1565
112 M	-	-	-	-	-	-	2655	2155	-	-	-	-	-	-	2060	1560
112 MB	1615	1115	2060	1560	2385	1885	2655	2155	1275	775	1610	1110	1860	1360	2060	1560
132 M	-	-	2245	1645	-	-	2875	2270	-	-	1760	1160	-	-	2240	1640
132 MA	-	-	2245	1645	2595	1995	-	-	-	-	1760	1160	2025	1425	-	-
132 MC	-	-	-	-	2580	1980	-	-	-	-	-	-	2010	1410	-	-
132 MBA	-	-	2235	1635	-	-	-	-	-	-	1750	1150	-	-	-	-
132 S	-	-	-	-	2600	2000	2885	2285	-	-	-	-	2030	1435	2245	1645
132 SA	-	-	-	-	-	-	-	-	-	-	-	-	-	-	-	-
132 SB	1770	1170	-	-	-	-	-	-	1400	800	-	-	-	-	-	-
132 SBB	1760	1160	-	-	-	-	-	-	1395	795	-	-	-	-	-	-
132 SC	1760	1160	-	-	-	-	-	-	1395	795	-	-	-	-	-	-
132 SMA	-	-	-	-	-	-	-	-	-	-	-	-	-	-	-	-
132 SMB	2220	1620	2840	2240	-	-	-	-	1740	1140	2205	1605	-	-	-	-
132 SMC	2220	1620	-	-	-	-	-	-	1740	1140	-	-	-	-	-	-
132 SMD	-	-	2830	2200	-	-	-	-	-	-	2230	1595	-	-	-	-
132 SME	2210	1610	-	-	-	-	-	-	1730	1130	-	-	-	-	-	-
160	4160	4160	4740	4740	4840	4840	5980	5980	3425	3425	3920	3920	4000	4000	4920	4920
180	5480	5480	4360	4360	5980	5980	6000	6620	4600 [1]	4600 [1]	3540	3540	4940	4630	5460	5460
200	5000	6880	5000	7660	5000	8300	5000	9880	5000 [2]	5700 [2]	5000	6340	5000	6880	5000	8160
225	5000	7380	5000	7600	5000	10140	5000	11420	5000 [3]	6120 [3]	5000	6220	5000	8420	5000	9460
250	6000 [4]	9020 [4]	6000	9800	6000	11520	6000	13700	6000 [4]	7500 [4]	6000	8040	6000	9520	6000	11380
280	5260	5260	6500	6500	7500	7500	7740	7740	4220	4220	5160	5160	6040	6040	6180	6180

[1] The maximum lifetime of the grease is 38 000 h, see page 18.
[2] The maximum lifetime of the grease is 27 000 h, see page 18.
[3] The maximum lifetime of the grease is 23 000 h, see page 18.
[4] The maximum lifetime of the grease is 16 000 h, see page 18.

Permissible axial forces

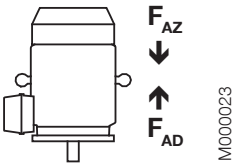

Mounting arrangement IM V1

Motor size	20,000 hours								40,000 hours							
	2-pole		4-pole		6-pole		8-pole		2-pole		4-pole		6-pole		8-pole	
	F_{AD} N	F_{AZ} N	F_{AD} N	F_{AZ} N	F_{AD} N	F_{AZ} N	F_{AD} N	F_{AZ} N	F_{AD} N	F_{AZ} N	F_{AD} N	F_{AZ} N	F_{AD} N	F_{AZ} N	F_{AD} N	F_{AZ} N
63	495	115	585	155	600	180	-	-	440	95	490	105	550	115	-	-
71	640	315	800	470	925	570	1020	665	530	200	650	320	745	390	815	455
80	845	450	1075	640	1225	795	1350	925	690	290	865	430	980	550	1070	645
90	945	450	1245	600	1360	815	1485	960	775	280	1020	375	1095	550	1185	660
100	1710	1060	2180	1485	2510	1815	2780	2080	1370	715	1735	1035	1980	1285	2185	1485
112 M	-	-	-	-	-	-	2790	2070	-	-	-	-	-	-	2195	1475
112 MB	1725	1040	2210	1460	2540	1785	2810	2055	1385	700	1110	1010	2010	1260	2210	1460
132 M	-	-	2460	1505	-	-	3130	2115	-	-	1970	1015	-	-	2490	1470
132 MA	-	-	2460	1505	2815	1850	-	-	-	-	1970	1015	2245	1280	-	-
132 MC	-	-	-	-	2885	1780	-	-	-	-	-	-	2315	1210	-	-
132 MBA	-	-	2495	1465	-	-	-	-	-	-	2010	980	-	-	-	-
132 S	-	-	-	-	2780	1885	3100	2145	-	-	-	-	2210	1315	2460	1505
132 SA	-	-	-	-	-	-	-	-	-	-	-	-	-	-	-	-
132 SB	1910	1075	-	-	-	-	-	-	1540	705	-	-	-	-	-	-
132 SBB	1950	1050	-	-	-	-	-	-	1580	670	-	-	-	-	-	-
132 SC	1945	1045	-	-	-	-	-	-	1575	670	-	-	-	-	-	-
132 SMA	-	-	-	-	-	-	-	-	-	-	-	-	-	-	-	-
132 SMB	2435	1480	3150	2035	-	-	-	-	1950	995	2515	1400	-	-	-	-
132 SMC	2445	1470	-	-	-	-	-	-	1960	985	-	-	-	-	-	-
132 SMD	-	-	3195	1995	-	-	-	-	-	-	2560	1355	-	-	-	-
132 SME	2490	1425	-	-	-	-	-	-	2005	940	-	-	-	-	-	-
160	4560	3810	5260	4310	5400	4420	6560	5580	3860	3110	4440	3490	4540	3560	5460	4480
180	5920	5115	5080	3860	6000	5445	6000	6120	5060 [1]	4255 [1]	4240	3020	5600	4385	6000	4900
200	5000	6350	5000	6950	5000	7505	5000	9215	5000 [2]	5230 [2]	5000	5650	5000	6025	5000	7435
225	5000	6770	5000	6795	5000	9270	5000	10595	5000 [3]	5490 [3]	5000	5475	5000	7490	5000	8535
250	6000 [4]	8335 [4]	6000	8820	6000	10275	6000	12645	6000 [4]	6755 [4]	6000	7120	6000	8235	6000	10205
280	6400	4400	7920	5400	8500	6180	8500	6435	5420	3420	6640	4120	7840	4640	7980	4775

[1] The maximum lifetime of the grease is 38 000 h, see page 18.
[2] The maximum lifetime of the grease is 27 000 h, see page 18.
[3] The maximum lifetime of the grease is 23 000 h, see page 18.
[4] The maximum lifetime of the grease is 16 000 h, see page 18.

Rating plates

The rating plate is in table form giving values for speed, current and power factor for three voltages.
The following information must be shown on the motor rating plate according to IEC 60034-30; 2008 and European MEPS (Commission Regulation, EC, No 640/2009):

- Lowest nominal efficiency at 100, 75 and 50 percent rated load
- Efficiency level (IE2 or IE3)
- Year of manufacture

Motor sizes 71 to 80

ABB 3~Motor M3AA 080 C 2 IE2 CE
3GAA081313-ASE No. E101508P9150 Cl. F IP 55
6204-2Z/C3 6203-2Z/C3 11 kg

V	Hz	r/min	kW	A	Cos φ
230 D / 400 Y	50	2880	1,1	4,1 / 2,4	0,78
415 Y	50	2870	1,1	2,4	0,76

IE2-81,9(100%)-81(75%)-78,5(50%) 2009 IEC 60034-1

M000526

Motor sizes 90 to 132

ABB IE2 CE
3~Motor M3AA 100 LB 2 CL. F IP 55 IEC60034-1
3GAA101312-ASE
Nº. E101110P9165 2009

V	Hz	r/min	kW	A	Cos φ
230 D	50	2930	3	10	0,83
400 Y	50	2930	3	5,8	0,83
415 Y	50	2940	3	5,8	0,8

IE2-87,6(100%)-87,1(75%)-85(50%)

6306-2Z/C3 6205-2Z/C3 25 kg

M000524

Motor sizes 160 to 180

ABB IE2 CE
3~ Motor M3AA 180 MLB 4 Cl. F IP 55 IEC 60034-1

V		Hz	kW	r/min	A	cos φ	duty
690	Y	50	22	1475	24,0	0,83	S1
400	Δ	50	22	1475	41,5	0,83	S1
415	Δ	50	22	1477	40,4	0,81	S1

Prod.code 3GAA182032-ADG No 3GV0912345678001
50 Hz: IE2 - 92,1(100%) - 93,1(75%) - 93,0(50%) 2009

6313-2Z/C3 6212-2Z/C3 188 kg
spare-parts:www.abb.com/partsonline

M000502

Motor sizes 200 to 280

ABB IE2 CE
3~Motor M3AA 225 SMA 4
2009 No 3GV0923456789001
Ins.cl. F IP 55

V		Hz	kW	r/min	A	cosφ	duty
690	Y	50	37	1479	39,2	0,84	S1
400	Δ	50	37	1479	68	0,84	S1
415	Δ	50	37	1481	68	0,81	S1

50 Hz: IE2 - 93,4(100%) - 93,9(75%) - 93,4(50%)

Prod.code 3GAA222031-ADG

6313-2Z/C3 6212-2Z/C3 240 kg
spare-parts:www.abb.com/partsonline IEC 60034-1

M000503

Ordering information

When placing an order, please state the following minimum data in the order, as in the example.

The product code of the motor is composed in accordance with the following example.

Motor type	**M3AA 112 MB**
Pole number	**4**
Mounting arrangement (IM-code)	**IM B3 (IM 1001)**
Rated output	**4 kW**
Product code	**3GAA 112312-ADE**
Variant codes if needed	

Motor size

A	B	C	D, E, F
M3AA	**112 MB**	**3GAA 112 312 -**	**ADE, 122, 003, etc.**

1 2 3 4 5 6 7 8 9 10 11 12 13 14...

A Motor type
B Motor size
C Product code

D Code for mounting arrangement

E Voltage and frequency code

F Generation code followed by variant codes

Explanation of the product code

Positions 1 to 4
3GAA = Totally enclosed motor with aluminum stator frame

Position 4
Type of rotor
A = Squirrel cage rotor

Positions 5 and 6
IEC size
06 = 63
07 = 71
08 = 80
09 = 90
10 = 100
11 = 112
13 = 132
16 = 160
18 = 180
20 = 200
22 = 225
25 = 250
28 = 280

Position 7
Pole pairs
1 = 2 poles
2 = 4 poles
3 = 6 poles
4 = 8 poles
5 = 10 poles
6 = 12 poles
7 = > 12 poles
8 = Two-speed motors
9 = Multi-speed motors

Positions 8 to 10
Running number

Position 11
- (dash)

Position 12
Mounting arrangement
A = Foot-mounted motor
B = Flange-mounted motor. Large flange with clearance holes.
C = Flange-mounted motor. Small flange with tapped holes.
F = Foot- and flange-mounted motor. Special flange.
H = Foot- and flange-mounted motor. Large flange with clearance holes.
J = Foot- and flange-mounted motor. Small flange with tapped holes.
N = Flange-mounted (CI ring flange FF)
P = Foot-and flange-mounted motor (CI ring flange FF)
V = Flange-mounted motor. Special flange.

Position 13
Voltage and frequency code
Single-speed motors
B 380 VΔ 50 Hz
D 400 VΔ, 415 VΔ, 690 VY 50 Hz
E 500 VΔ 50 Hz
F 500 VY 50 Hz
S 230 VΔ, 400 VY, 415 VY 50 Hz
T 660 VΔ 50 Hz
U 690 VΔ 50 Hz
X Other rated voltage, connection or frequency, 690 V maximum
Two-speed motors
A 220 V 50 Hz
B 380 V 50 Hz
D 400 V 50 Hz
E 500 V 50 Hz
S 230 V 50 Hz
X Other rated voltage, connection or frequency, 690 V maximum

Remark: For voltage code X the variant code '209 Non-standard voltage or frequency (special winding)' must be ordered.

Position 14
Version **A,B,C...** = Generation code followed by variant codes

Process performance aluminum motors IE2
Technical data for totally enclosed squirrel cage three phase motors

P 55 - IC 411 - Insulation class F, temperature rise class B
IE2 efficiency class according to IEC 60034-30; 2008

Output kW	Motor type	Product code	Speed r/min	Efficiency IEC 60034-2-1; 2007 Full load 100%	3/4 load 75%	1/2 load 50%	Power factor cos φ	Current I_N A	I_s / I_N	Torque T_N Nm	T_l / T_N	T_b / T_N	Moment of inertia J = 1/4 GD² kgm²	Weight kg	Sound pressure level L_{PA} dB
3000 r/min = 2-poles		400 V 50 Hz						CENELEC-design							
0.18	M3AA 63 A	3GAA 061 311-••C	2820	75	72	66.1	0.62	0.55	4.2	0.6	3.5	3.1	0.00013	3.9	54
0.25	M3AA 63 B	3GAA 061 312-••C	2810	78.6	77	69.6	0.69	0.66	4.5	0.84	3.6	3.3	0.00016	4.4	54
0.37	M3AA 71 A	3GAA 071 311-••E	2800	71.6	72.3	70.2	0.76	0.98	5.1	1.26	3	2.9	0.00035	4.9	58
0.55	M3AA 71 B	3GAA 071 312-••E	2790	78.4	79.8	78.7	0.78	1.29	5.3	1.88	2.9	2.8	0.00045	5.9	58
0.75	M3AA 80 B	3GAA 081 312-••E	2880	80.3	80	76.7	0.76	1.77	7.2	2.4	4	4.4	0.0009	10.5	60
1.1	M3AA 80 C	3GAA 081 313-••E	2870	80.9	81.7	79.8	0.78	2.5	7.4	3.6	3.9	3.5	0.0012	11	60
1.5	M3AA 90 L	3GAA 091 312-••E	2900	84.1	85	83.5	0.86	2.9	7.6	4.9	2.5	3.32	0.0024	16	60
2.2	M3AA 90 LB	3GAA 091 313-••E	2875	84.6	85.7	85.5	0.85	4.4	6.9	7.3	2.8	3.2	0.0027	18	63
3	M3AA 100 LB	3GAA 101 312-••E	2920	86.4	86	83.9	0.86	5.8	9.3	9.8	3.3	3.9	0.005	25	62
4	M3AA 112 MB	3GAA 111 312-••E	2885	86.1	87	88	0.88	7.6	7.6	13.2	2.5	2.8	0.0062	30	68
5.5	M3AA 132 SB	3GAA 131 312-••E	2915	88	88.5	87.6	0.82	11	7.9	18	2.6	3.6	0.016	42	73
7.5	M3AA 132 SC	3GAA 131 313-••E	2915	88.5	88.7	88.1	0.87	14	7.6	24.5	2.2	3.2	0.022	56	73
11	M3AA 160 MLA	3GAA 161 031-••G	2938	90.7	91.5	91.1	0.91	19.2	7.5	35.7	2.4	3.1	0.044	91	69
11	M3AA 160 MB	3GAA 161 312-••E	2900	90.3	90.8	90.4	0.87	20.2	8.5	36.2	2.7	3.7	0.01865	79	68
15	M3AA 160 M	3GAA 161 313-••E	2905	90.4	90.7	89.8	0.84	28.5	9.1	49.3	3.3	3.95	0.02	83	69
15	M3AA 160 MLB	3GAA 161 036-••G	2934	91.5	92.5	92.2	0.91	26	7.5	48.8	2.5	3.3	0.053	105	69
18.5	M3AA 160 LB	3GAA 161 315-••E	2895	91.1	92.2	92.4	0.89	32.9	9.7	61	3.2	4.3	0.02559	95	68
18.5	M3AA 160 MLC	3GAA 161 037-••G	2932	92	93.1	93.1	0.92	31.5	7.5	60.2	2.9	3.4	0.063	123	69
22	M3AA 180 MLA	3GAA 181 031-••G	2952	92.2	92.7	92.2	0.87	39.5	7.7	71.1	2.8	3.3	0.076	132	69
30	M3AA 200 MLA	3GAA 201 035-••G	2956	93.1	93.5	92.9	0.9	51.6	7.7	96.9	2.7	3.1	0.178	210	72
37	M3AA 200 MLB	3GAA 201 036-••G	2959	93.4	93.7	93	0.9	63.5	8.2	119	3	3.3	0.196	225	72
45	M3AA 225 SMA	3GAA 221 031-••G	2961	93.6	93.9	93.1	0.88	78.8	6.7	145	2.5	2.5	0.244	263	74
55	M3AA 250 SMA	3GAA 251 031-••G	2967	94.1	94.4	93.8	0.88	95.8	6.8	177	2.2	2.7	0.507	304	75
75	M3AA 280 SMA	3GAA 281 031-••G	2968	94.5	94.8	94.3	0.89	128	7.1	241	2.5	2.8	0.583	389	75
90 [1]	M3AA 280 SMB	3GAA 281 032-••G	2971	95	95.2	94.8	0.89	153	7.8	289	2.6	3.2	0.644	425	75
3000 r/min = 2-poles		400 V 50 Hz						High-output design							
11	M3AA 132 SMB	3GAA 131 315-••E	2900	90.3	90.8	90.4	0.87	20.2	8.5	36.2	2.7	3.7	0.01865	77	68
15	M3AA 132 SMC	3GAA 131 316-••E	2905	90.4	90.7	89.8	0.84	28.5	9.1	49.3	3.3	3.95	0.02	81	69
18.5	M3AA 132 SME	3GAA 131 317-••E	2895	91.1	92.2	92.4	0.89	32.9	9.7	61	3.2	4.3	0.02559	93	68
22	M3AA 160 MLD	3GAA 161 034-••G	2933	91.7	92.9	92.9	0.91	38	8.1	71.6	3.2	3.6	0.063	123	69
30	M3AA 180 MLB	3GAA 181 032-••G	2950	92.8	93.5	93.3	0.88	53	7.9	97.1	2.8	3.3	0.092	149	69
45	M3AA 200 MLC	3GAA 201 033-••G	2957	93.3	93.8	93.2	0.88	79.1	8.1	145	3.1	3.3	0.196	225	72
55 [1]	M3AA 200 MLD	3GAA 201 034-••G	2953	93.8	94.5	94.3	0.89	95	7.8	177	2.9	3.3	0.217	241	72
55	M3AA 225 SMB	3GAA 221 032-••G	2961	93.9	94.3	93.6	0.88	96	6.5	177	2.4	2.5	0.274	286	74
75 [1]	M3AA 225 SMC	3GAA 221 033-••G	2969	94.5	94.7	94	0.84	136	7.4	241	3.2	3.1	0.309	312	74
75	M3AA 250 SMB	3GAA 251 032-••G	2970	94.6	94.9	94.4	0.89	128	7.6	241	2.8	3.1	0.583	351	75
80 [1]	M3AA 225 SMD	3GAA 221 034-••G	2964	94.5	94.9	94.3	0.87	140	7.3	257	3	2.8	0.329	317	74
90 [1]	M3AA 250 SMC	3GAA 251 033-••G	2971	95	95.3	95	0.89	153	7.6	289	2.5	3.1	0.644	386	75

[1] Temperature rise class F

The two bullets in the product code indicate choice of mounting arrangements, voltage and frequency code (see ordering information page).

I_s / I_N = Starting current
T_l / T_N = Locked rotor torque
T_b / T_N = Breakdown torque

Efficiency values are given according to IEC 60034-2-1; 2007.
Please note that the values are not comparable without knowing the testing method.
ABB has calculated the efficiency values according to indirect method, stray load losses (additional losses) determined from measuring.

Process performance aluminum motors IE2
Technical data for totally enclosed squirrel cage three phase motors

P 55 - IC 411 - Insulation class F, temperature rise class B
IE2 efficiency class according to IEC 60034-30; 2008

Output kW	Motor type	Product code	Speed r/min	Efficiency IEC 60034-2-1; 2007 Full load 100%	3/4 load 75%	1/2 load 50%	Power factor cos φ	Current I_N A	I_s/I_N	Torque T_N Nm	T_l/T_N	T_b/T_N	Moment of inertia J = 1/4 GD² kgm²	Weight kg	Sound pressure level L_{PA} dB
1500 r/min = 4-poles		400 V 50 Hz						CENELEC-design							
0.12	M3AA 63 A	3GAA 062 311-••C	1400	65.5	60.4	51.7	0.57	0.46	3.1	0.81	2.7	2.8	0.00019	4	40
0.18	M3AA 63 B	3GAA 062 312-••C	1380	67.3	63.9	56.7	0.62	0.62	3.1	1.24	2.5	2.6	0.00026	4.5	40
0.25	M3AA 71 A	3GAA 072 311-••E	1365	65.1	66	62.7	0.76	0.72	4	1.74	2	2.1	0.00066	5.2	45
0.37	M3AA 71 B	3GAA 072 312-••E	1375	69.7	71.9	71.1	0.79	0.96	3.8	2.5	2	2.2	0.0008	5.9	45
0.55	M3AA 80 A	3GAA 082 311-••E	1375	74.1	75.9	75	0.78	1.37	4.5	3.8	1.9	2.2	0.0013	8.5	50
0.75	M3AA 80 D	3GAA 082 314-••E	1415	79.8	81.3	79.9	0.82	1.65	5.9	5	2.6	3.2	0.0016	12	50
1.1	M3AA 90 LB	3GAA 092 314-••E	1435	83.7	84.1	83	0.78	2.4	6.6	7.3	2.9	3.2	0.0043	16	50
1.5	M3AA 90 LD	3GAA 092 315-••E	1435	84.2	84.1	81.9	0.76	3.3	7	9.9	3.1	3.5	0.0048	17	50
2.2	M3AA 100 LC	3GAA 102 313-••E	1450	86.4	86.2	84.1	0.79	4.6	7.3	14.4	2.8	3.4	0.009	25	54
3	M3AA 100 LD	3GAA 102 314-••E	1445	85.7	86.1	85.1	0.79	6.3	7	19.8	2.4	3	0.011	28	63
4	M3AA 112 MB	3GAA 112 312-••E	1445	86.7	86.5	85.2	0.75	8.8	7.3	26.4	3.1	3.4	0.0126	34	64
5.5	M3AA 132 M	3GAA 132 312-••E	1465	89	89.8	89.1	0.79	11.2	6.3	35.8	1.9	2.6	0.038	48	66
7.5	M3AA 132 MA	3GAA 132 314-••E	1460	89.1	89.9	89.5	0.79	15.3	6.4	49	1.8	2.6	0.048	59	63
11	M3AA 160 MLA	3GAA 162 031-••G	1466	90.4	91.6	91.3	0.84	20.9	6.8	71.6	2.2	2.8	0.081	99	62
11	M3AA 160 MB	3GAA 162 312-••E	1460	90.4	91	90.1	0.79	22.2	7.7	71.9	2.1	3.13	0.0433	85	65
15	M3AA 160 MLB	3GAA 162 032-••G	1470	91.4	92.4	92.2	0.83	28.5	7.1	97.4	2.6	3	0.099	118	62
15	M3AA 160 LB	3GAA 162 314-••E	1455	90.6	91.3	91.1	0.77	31	7.1	98.4	2.4	2.9	0.0517	84	67
18.5	M3AA 180 MLA	3GAA 182 031-••G	1477	91.9	92.9	92.7	0.84	34.5	7.2	119	2.6	2.9	0.166	146	62
22	M3AA 180 MLB	3GAA 182 032-••G	1475	92.4	93.3	93.2	0.84	40.9	7.3	142	2.6	3	0.195	163	62
30	M3AA 200 MLA	3GAA 202 031-••G	1480	93.2	94	93.7	0.84	55.3	7.4	193	2.8	3	0.309	218	63
37	M3AA 225 SMA	3GAA 222 031-••G	1479	93.4	93.9	93.4	0.84	68	7.1	238	2.6	2.9	0.356	240	66
45	M3AA 225 SMB	3GAA 222 032-••G	1480	93.9	94.3	93.9	0.85	81.3	7.5	290	2.8	3.2	0.44	273	66
55	M3AA 250 SMA	3GAA 252 031-••G	1480	94.4	95	94.7	0.85	98.9	7	354	2.6	2.9	0.765	314	67
75 [1]	M3AA 280 SMA	3GAA 282 031-••G	1478	94.3	95	94.7	0.85	135	7.1	484	2.8	3	0.866	389	67
90 [1]	M3AA 280 SMB	3GAA 282 032-••G	1478	94.7	95.4	95.2	0.84	163	7.7	581	3.2	3.4	0.941	418	67
1500 r/min = 4-poles		400 V 50 Hz						High-output design							
0.55	M3AA 71 C	3GAA 072 003-••E	1375	69	69.3	68.5	0.76	1.51	4.2	3.8	2.4	2.4	0.0011	6.5	45
9.2	M3AA 132 MBA	3GAA 132 004-••E	1460	89.8	90.8	90.2	0.79	18.7	7.3	60.1	2.2	3.4	0.048	59	59
11	M3AA 132 SMB	3GAA 132 315-••E	1460	90.4	91	90.1	0.79	22.2	7.7	71.9	2.1	3.13	0.0433	83	65
15	M3AA 132 SMD	3GAA 132 316-••E	1455	90.6	91.3	91.1	0.77	31	7.1	98.4	2.4	2.9	0.0517	82	67
18.5	M3AA 160 MLC	3GAA 162 033-••G	1469	91.4	92.5	92.3	0.84	34.7	7.6	120	3	3.2	0.11	127	62
22	M3AA 160 MLD	3GAA 162 034-••G	1463	91.6	93	93.2	0.85	40.7	6.9	143	2.5	2.9	0.125	140	62
30 [1]	M3AA 180 MLC	3GAA 182 033-••G	1474	92.3	93.5	93.5	0.83	56.5	7.3	194	2.7	2.9	0.217	177	62
37	M3AA 200 MLB	3GAA 202 032-••G	1479	93.4	94.4	94.4	0.85	67.2	7.1	238	2.6	2.9	0.343	234	63
45 [1]	M3AA 200 MLC	3GAA 202 033-••G	1479	93.6	94.4	94.2	0.83	83.6	7.5	290	2.9	3.2	0.366	246	63
55	M3AA 225 SMC	3GAA 222 033-••G	1478	94	94.7	94.5	0.85	99.3	7.4	355	2.9	3.1	0.474	287	66
75 [1]	M3AA 250 SMB	3GAA 252 032-••G	1478	94.4	95.1	94.9	0.85	134	7.3	484	2.8	3.1	0.866	350	67
90 [1]	M3AA 250 SMC	3GAA 252 033-••G	1478	94.7	95.3	95	0.84	163	7.4	581	3.1	3.3	0.941	377	67

[1] Temperature rise class F

The two bullets in the product code indicate choice of mounting arrangements, voltage and frequency code (see ordering information page).

I_s / I_N = Starting current
T_l / T_N = Locked rotor torque
T_b / T_N = Breakdown torque

Efficiency values are given according to IEC 60034-2-1; 2007.
Please note that the value are not comparable without knowing the testing method.
ABB jas calculated the efficiency values according to indirect method, stray, load losses (additional losses) determined from measuring.

Process performance aluminum motors IE2
Technical data for totally enclosed squirrel cage three phase motors

P 55 - IC 411 - Insulation class F, temperature rise class B
IE2 efficiency class according to IEC 60034-30; 2008

Output kW	Motor type	Product code	Speed r/min	Efficiency IEC 60034-2-1; 2007 Full load 100%	3/4 load 75%	1/2 load 50%	Power factor cos φ	Current I_N A	I_s / I_N	Torque T_N Nm	T_l / T_N	T_b / T_N	Moment of inertia J = 1/4 GD² kgm²	Weight kg	Sound pressure level L_{PA} dB
1000 r/min = 6-poles		**400 V 50 Hz**						**CENELEC-design**							
0.09	**M3AA 63 A**	3GAA 063 311-••C	910	47.1	42.5	32.1	0.56	0.49	2.1	0.94	2.1	2.1	0.0002	4	38
0.12	**M3AA 63 B**	3GAA 063 312-••C	910	57.5	54	46.2	0.58	0.51	2.1	1.25	2.1	2.1	0.00027	4.5	38
0.18	**M3AA 71 A**	3GAA 073 311-••E	885	59.5	61.1	56.5	0.71	0.61	3.1	1.94	1.7	1.9	0.00092	5.5	42
0.25	**M3AA 71 B**	3GAA 073 312-••E	895	64	63.6	59.5	0.71	0.79	3.3	2.6	2.2	2.2	0.0012	6.5	42
0.37	**M3AA 80 A**	3GAA 083 311-••E	910	69.9	71.4	68.8	0.73	1.04	3.6	3.8	1.6	2	0.002	9	47
0.55	**M3AA 80 B**	3GAA 083 312-••E	905	72.1	73.4	71.2	0.69	1.59	3.3	5.8	1.8	1.9	0.0026	10	47
0.75	**M3AA 90 LB**	3GAA 093 313-••E	930	77.6	76.2	75.6	0.71	1.96	4	7.7	2	2.3	0.0048	18	44
1.1	**M3AA 90 LD**	3GAA 093 314-••E	935	78.2	79.1	76.5	0.66	3	4.2	11.2	2.2	2.6	0.0056	20	44
1.5	**M3AA 100 LC**	3GAA 103 312-••E	945	80.3	81.4	80.7	0.73	3.6	3.9	15.1	1.7	2	0.009	26	49
2.2	**M3AA 112 MB**	3GAA 113 312-••E	955	81.9	82.3	79.8	0.72	5.3	5.2	21.9	1.8	2.2	0.01	28	56
3	**M3AA 132 S**	3GAA 133 311-••E	960	83.3	83.6	81.7	0.65	7.9	4.3	29.8	1.6	2.3	0.031	39	57
4	**M3AA 132 MA**	3GAA 133 312-••E	960	84.9	85.3	83.9	0.68	10	4.6	39.7	1.5	2.18	0.038	46	61
5.5	**M3AA 132 MC**	3GAA 133 314-••E	965	86.1	86.1	84.3	0.67	13.7	6.2	54.4	2.5	2.8	0.049	59	61
7.5	**M3AA 160 MLA**	3GAA 163 031-••G	975	88.6	89.9	89.7	0.79	15.4	7.4	73.4	1.7	3.2	0.087	98	59
11	**M3AA 160 MLB**	3GAA 163 032-••G	972	89.3	90.7	90.6	0.79	22.5	7.5	108	1.9	2.9	0.114	125	59
15	**M3AA 180 MLA**	3GAA 183 031-••G	981	90.5	91.4	91	0.77	31	6.5	146	1.8	2.8	0.192	162	59
18.5	**M3AA 200 MLA**	3GAA 203 031-••G	988	91.6	92.3	91.7	0.8	36.4	6.7	178	2.3	2.9	0.382	196	63
22	**M3AA 200 MLB**	3GAA 203 032-••G	987	92	93	92.8	0.82	42	6.6	212	2.2	2.8	0.448	218	63
30	**M3AA 225 SMA**	3GAA 223 031-••G	986	92.7	93.3	92.9	0.83	56.2	7	290	2.6	2.9	0.663	266	63
37	**M3AA 250 SMA**	3GAA 253 031-••G	989	93.1	93.8	93.4	0.82	69.9	6.8	357	2.4	2.7	1.13	294	63
45 [1]	**M3AA 280 SMA**	3GAA 283 031-••G	988	93.2	94	93.9	0.84	82.9	6.8	434	2.4	2.6	1.369	378	63
55 [1]	**M3AA 280 SMB**	3GAA 283 032-••G	988	93.2	94.1	94	0.84	101	7.1	531	2.6	2.8	1.5	404	63
1000 r/min = 6-poles		**400 V 50 Hz**						**High-output design**							
0.37	**M3AA 71 C**	3GAA 073 003-••E	870	61.5	61.2	59	0.72	1.2	3.1	4	2.5	2.4	0.0015	7	44
30 [1]	**M3AA 200 MLC**	3GAA 203 033-••G	985	92	93.1	92.9	0.83	56.7	6.9	290	2.3	2.8	0.531	245	63
37	**M3AA 225 SMB**	3GAA 223 034-••G	985	93.1	94	94	0.83	69.1	6.6	358	2.3	2.6	0.821	300	63
45	**M3AA 250 SMB**	3GAA 253 032-••G	989	93.4	94.1	93.9	0.83	83.7	7	434	2.5	2.7	1.369	341	63
45 [1]	**M3AA 225 SMC**	3GAA 223 033-••G	984	92.7	93.9	94	0.83	84.4	6.4	436	2.3	2.6	0.821	300	63
55 [1]	**M3AA 250 SMC**	3GAA 253 033-••G	988	93.2	94.1	94	0.84	101	7.1	531	2.6	2.8	1.5	367	63

[1] Temperature rise class F

The two bullets in the product code indicate choice of mounting arrangements, voltage and frequency code (see ordering information page).

I_s / I_N = Starting current
T_l / T_N = Locked rotor torque
T_b / T_N = Breakdown torque

Efficiency values are given according to IEC 60034-2-1; 2007.
Please note that the value are not comparable without knowing the testing method.
ABB jas calculated the efficiency values according to indirect method, stray, load losses (additional losses) determined from measuring.

Process performance aluminum motors
Technical data for totally enclosed squirrel cage three phase motors

P 55 - IC 411 - Insulation class F, temperature rise class B
IE2 efficiency class according to IEC 60034-30; 2008

Output kW	Motor type	Product code	Speed r/min	Efficiency IEC 60034-2-1; 2007 Full load 100%	3/4 load 75%	1/2 load 50%	Power factor cos φ	Current I_N A	I_s/I_N	Torque T_N Nm	T_l/T_N	T_b/T_N	Moment of inertia J = 1/4 GD² kgm²	Weight kg	Sound pressure level L_{PA} dB
750 r/min = 8-poles		400 V 50 Hz						CENELEC-design							
0.09	M3AA 71 A	3GAA 074 001-••E	660	49.4	46	38.5	0.59	0.44	2	1.3	2.4	2.3	0.00092	5.5	40
0.12	M3AA 71 B	3GAA 074 002-••E	670	51.4	47.5	39.9	0.56	0.6	2.1	1.71	2.8	2.4	0.0012	6.5	43
0.18	M3AA 80 A	3GAA 084 001-••E	685	63.5	62	56.3	0.62	0.65	2.8	2.5	1.6	2	0.0018	8.5	45
0.25	M3AA 80 B	3GAA 084 002-••E	685	67.1	67.2	63.4	0.63	0.85	2.8	3.4	1.4	1.93	0.0024	9.5	50
0.37	M3AA 90 S	3GAA 094 001-••E	695	59.4	56.3	49.1	0.54	1.66	2.7	5	1.6	2.1	0.0032	13	52
0.55	M3AA 90 L	3GAA 094 002-••E	660	59.1	59.5	55.2	0.58	2.3	2.1	7.9	1.5	1.6	0.0043	16	52
0.75	M3AA 100 LA	3GAA 104 001-••E	720	70.7	67.1	59.9	0.47	3.2	3.9	9.9	2.8	3.6	0.0069	20	46
1.1	M3AA 100 LB	3GAA 104 002-••E	695	76	76.5	74.6	0.66	3.1	3.4	15.1	1.7	2.2	0.0082	23	53
1.5	M3AA 112 M	3GAA 114 101-••E	690	74.4	75.9	74.1	0.7	4.1	3.2	20.7	1.4	1.87	0.01	28	55
2.2	M3AA 132 S	3GAA 134 001-••E	715	77.7	79.2	77.6	0.65	6.2	3.4	29.3	1.3	1.9	0.0038	46	56
3	M3AA 132 M	3GAA 134 002-••E	715	79.3	80.8	79.8	0.64	8.5	3.2	40	1.2	1.8	0.0045	53	58
4	M3AA 160 MLA	3GAA 164 031-••G	728	84.1	85.1	83.7	0.67	10.2	5.4	52.4	1.5	2.6	0.068	84	59
5.5	M3AA 160 MLB	3GAA 164 032-••G	726	84.7	86	84.9	0.67	13.9	5.6	72.3	1.4	2.6	0.085	98	59
7.5	M3AA 160 MLC	3GAA 164 033-••G	727	86.1	87.3	86.6	0.65	19.3	4.7	98.5	1.5	2.8	0.132	137	59
11	M3AA 180 MLA	3GAA 184 031-••G	731	86.8	88.4	87.8	0.67	27.3	4.4	143	1.8	2.6	0.214	175	59
15	M3AA 200 MLA	3GAA 204 031-••G	737	90.2	91.3	90.9	0.74	32.4	5.3	194	2	2.4	0.45	217	60
18.5	M3AA 225 SMA	3GAA 224 031-••G	739	91	92	91.5	0.73	40.1	5.2	239	2	2.3	0.669	266	63
22	M3AA 225 SMB	3GAA 224 032-••G	738	91.6	92.4	92	0.74	46.8	5.5	284	2	2.3	0.722	279	63
30	M3AA 250 SMA	3GAA 254 031-••G	742	92.4	92.9	92.3	0.71	66	5.8	386	2.6	2.4	1.404	340	63
37	M3AA 280 SMA	3GAA 284 031-••G	740	92.3	93	92.7	0.74	78.1	5.6	477	2.4	2.3	1.505	403	63
750 r/min = 8-poles		400 V 50 Hz						High-output design							
0.18 [1]	M3AA 71 C	3GAA 074 003-••E	660	47.2	44.8	45	0.66	0.83	2.2	2.6	2.3	2.2	0.0015	7	40
0.37 [1]	M3AA 80 C	3GAA 084 003-••E	700	57.5	56	55	0.62	1.49	3.3	5	2.5	2.5	0.0031	11	45
0.75 [1]	M3AA 90 LB	3GAA 094 003-••E	635	58.5	60.7	56.2	0.6	3	2.7	11.2	1.7	2	0.0048	18	43
1.5 [1]	M3AA 100 LC	3GAA 104 003-••E	685	70.7	72.4	69.1	0.64	4.7	3.1	20.9	1.9	2	0.009	26	46
2 [1]	M3AA 112 MB	3GAA 114 102-••E	690	74.2	76.4	74	0.67	5.8	3.5	27.6	1.8	2.1	0.0126	32	52
3.8 [1]	M3AA 132 MB	3GAA 134 003-••E	710	76.7	79.3	78.1	0.68	10.5	3.7	51.1	1.4	2.5	0.049	54	68

[1] Temperature rise class F

The two bullets in the product code indicate choice of mounting arrangements, voltage and frequency code (see ordering information page).

I_s / I_N = Starting current
T_l / T_N = Locked rotor torque
T_b / T_N = Breakdown torque

Efficiency values are given according to IEC 60034-2-1; 2007.
Please note that the value are not comparable without knowing the testing method.
ABB jas calculated the efficiency values according to indirect method, stray, load losses (additional losses) determined from measuring.

Process performance aluminum motors – variant codes

Code[1]	Variant code	Frame Size 63	71	80	90	100	112	132	160	180	200	225	250	280
Balancing														
417	Vibration acc. to Grade B (IEC 60034-14).	NA	NA	NA	P	P	P	P	R	R	R	R	R	R
423	Balanced without key.	P	P	P	P	P	P	P	P	P	P	P	P	P
424	Full key balancing.	P	P	P	P	P	P	P	P	P	P	P	P	P
Bearings and Lubrication														
036	Transport lock for bearings.	NA	NA	NA	M	M	M	M	M	M	M	M	M	M
037	Roller bearing at D-end.	NA	NA	NA	P	P	P	P	M	M	M	M	M	M
039	Cold resistant grease.	M	M	M	M	M	M	M	NA	NA	NA	NA	NA	NA
040	Heat resistant grease.	M	M	M	M	M	M	M	NA	NA	NA	NA	NA	NA
041	Bearings regreasable via grease nipples.	NA	NA	NA	P	P	P	P	M	M	M	M	M	S
042	Locked drive-end.	S	S	S	S	S	S	S	S	S	S	S	S	S
043	SPM compatible nipples for vibration measurement	NA	NA	NA	R	R	R	R	M	M	M	M	M	M
057	2RS bearings at both ends.	M	M	M	M	M	M	M	M	M	M	M	M	M
058	Angular contact bearing at D-end, shaft force away from bearing.	NA	NA	NA	M	M	M	M	M	M	M	M	M	M
059	Angular contact bearing at N-end, shaft force towards bearing.	NA	NA	NA	M	M	M	M	M	M	M	M	M	M
188	63-series bearings.	NA	NA	NA	M	S	S	M	S	S	S	S	S	S
194	2Z bearings greased for life at both ends.	S	S	S	S	S	S	S	S	S	S	S	S	M
195	Bearings greased for life.	S	S	S	S	S	S	S	S	S	S	S	S	NA
796	Grease nipples JIS B 1575 PT 1/8 Type A	NA	NA	NA	NA	NA	NA	NA	M	M	M	M	M	M
797	Stainless steel SPM Nipples	NA	NA	NA	R	R	R	R	M	M	M	M	M	M
798	Stainless steel grease nipples	NA	NA	NA	NA	NA	NA	NA	M	M	M	M	M	M
Branch standard designs														
071	Cooling Tower duty	NA	NA	NA	NA	NA	R	R	P	P	P	P	P	P
079	Silumin-alloy rotor cage.	P	P	P	P	P	P	P	NA	NA	NA	NA	NA	NA
142	“Manilla connection”.	P	P	P	P	P	P	P	P	P	P	P	P	P
178	Stainless steel / acid proof bolts.	M	M	M	M	M	M	M	M	M	M	M	M	M
209	Non-standard voltage or frequency, (special winding).	P	P	P	P	P	P	P	P	P	P	P	P	P
217	Cast iron D-end shield (on aluminum motor).	NA	NA	NA	M	M	M	M	S	S	S	S	S	S
425	Corrosion protected stator and rotor core.	P	P	P	P	P	P	P	P	P	P	P	P	P
785	Reinforced tropicalisation.	NA	NA	NA	NA	NA	NA	NA	P	P	P	P	P	P
Cooling system														
053	Metal fan cover.	S	M	M	M	M	M	M	S	S	S	S	S	S
068	Light alloy metal fan	R	M	M	M	M	M	M	M	M	M	M	M	M
075	Cooling method IC418 (without fan).	R	R	R	P	P	P	P	M	M	M	M	M	M
183	Separate motor cooling (fan axial, N-end).	NA	M	M	M	M	M	P	M	M	M	M	M	M
189	Separate motor cooling, IP44, 400V, 50Hz (fan axial, N-end).	NA	NA	NA	NA	NA	NA	NA	M	M	M	M	M	M
794	Fan for reduced noise level (4-p fan).	NA	NA	NA	NA	NA	NA	NA	R	R	R	R	R	R
Coupling														
035	Assembly of customer supplied coupling-half.	R	R	R	R	R	R	R	-	-	-	-	-	-
Documentation														
141	Binding dimension drawing.	R	R	R	R	R	R	R	M	M	M	M	M	M
Drain holes														
065	Plugged existing drain holes.	M	M	M	M	M	M	M	M	M	M	M	M	M
Earthing Bolt														
067	External earthing bolt.	M	M	M	M	M	M	M	M	M	M	M	M	M
Hazardous Environments														
	See catalog “Motors for hazardous Environments” for details													
Heating elements														
450	Heating element, 100-120V.	M	M	M	M	M	M	M	M	M	M	M	M	M
451	Heating element, 200-240V.	M	M	M	M	M	M	M	M	M	M	M	M	M

[1] Certain variant codes cannot be used simultaneously

S = Included as standard.
M = On modification of a stocked motor, or on new manufacture, the number per order may be limited.
P = New manufacture only.
R = On request.
NA = Not applicable.

Code[1]	Variant code	Frame Size 63	71	80	90	100	112	132	160	180	200	225	250	280
Insulation system														
014	Winding insulation class H.	R	R	R	P	P	P	P	P	P	P	P	P	P
405	Special winding insulation for frequency converter supply.	R	R	R	R	R	R	R	P	P	P	P	P	P
406	Winding for supply >690<=1000 Volts.	NA	NA	NA	NA	NA	NA	NA	NA	NA	P	P	P	P
Marine motors														
	See catalog “Marine Motors” for details													
Mounting arrangements														
007	IM 3001 flange mounted, IEC flange, from IM 1001 (B5 from B3).	NA	NA	NA	NA	NA	NA	NA	M	M	M	M	M	M
008	IM 2101 foot/flange mounted, IEC flange, from IM 1001 (B34 from B3).	M	M	M	M	M	M	M	M	NA	NA	NA	NA	NA
009	IM 2001 foot/flange mounted, IEC flange, from IM 1001 (B35 from B3).	M	M	M	M	M	M	M	M	M	M	M	M	M
047	IM 3601 flange mounted, IEC flange, from IM 3001 (B14 from B5).	M	M	M	M	M	M	M	M	NA	NA	NA	NA	NA
048	IM 3001 flange mounted, IEC flange, from IM 3601 (B5 from B14).	M	M	M	M	M	M	M	NA	NA	NA	NA	NA	NA
066	Modified for non-standard mounting position (please specify IM xxxx), (must be ordered for all mounting arrangements excluding IM B3 (1001), IM B5 (3001), IM B35 (2001), B34 (2101) & B14 (3601).	M	M	M	M	M	M	M	M	M	M	M	M	M
078	(IM 3601) Flange mounted, DIN C-flange.	NA	NA	NA	R	NA	NA	NA	NA	NA	NA	NA	NA	NA
116	Special flange.	R	R	R	R	R	NA	NA	NA	NA	NA	NA	NA	NA
200	Flange ring holder.	NA	M	M	M	M	M	M	NA	NA	NA	NA	NA	NA
218	Flange ring FT 85.	NA	M	M	M	NA	NA	NA	NA	NA	NA	NA	NA	NA
219	Flange ring FT 100.	NA	M	M	M	NA	NA	NA	NA	NA	NA	NA	NA	NA
220	Flange ring FF 100.	NA	M	M	M	NA	NA	NA	NA	NA	NA	NA	NA	NA
223	Flange ring FF 115.	NA	M	M	M	NA	NA	NA	NA	NA	NA	NA	NA	NA
224	Flange ring FT 115.	NA	M	M	M	M	M	NA	NA	NA	NA	NA	NA	NA
226	Flange ring FF 130.	NA	M	M	M	M	M	NA	NA	NA	NA	NA	NA	NA
227	Flange ring FT 130.	NA	M	M	M	M	M	NA	NA	NA	NA	NA	NA	NA
229	Flange FT 130.	NA	NA	NA	NA	M	M	NA	NA	NA	NA	NA	NA	NA
233	Flange ring FF 165.	NA	M	M	M	M	M	NA	NA	NA	NA	NA	NA	NA
234	Flange ring FT 165.	NA	M	M	M	M	M	NA	NA	NA	NA	NA	NA	NA
235	Flange FF 165.	NA	NA	NA	M	NA	NA	NA	NA	NA	NA	NA	NA	NA
236	Flange FT 165.	NA	NA	NA	NA	NA	NA	M	NA	NA	NA	NA	NA	NA
243	Flange ring FF 215.	NA	NA	NA	NA	M	M	M	NA	NA	NA	NA	NA	NA
244	Flange ring FT 215.	NA	NA	NA	NA	M	M	M	NA	NA	NA	NA	NA	NA
245	Flange FF 215.	NA	NA	NA	NA	M	M	NA	NA	NA	NA	NA	NA	NA
253	Flange ring FF 265.	NA	NA	NA	NA	NA	NA	M	NA	NA	NA	NA	NA	NA
254	Flange ring FT 265.	NA	NA	NA	NA	NA	NA	M	NA	NA	NA	NA	NA	NA
255	Flange FF 265.	NA	NA	NA	NA	NA	NA	M	NA	NA	NA	NA	NA	NA
260	Flange FT 115.	NA	NA	NA	M	NA	NA	NA	NA	NA	NA	NA	NA	NA
306	IM 1001 foot mounted, from IM 3601 (B3 from B14).	M	M	M	M	M	M	M	NA	NA	NA	NA	NA	NA
307	IM 2101 foot/flange mounted, IEC flange, from IM 3601 (B34 from B14).	M	M	M	M	M	M	M	NA	NA	NA	NA	NA	NA
308	IM 2001 foot/flange mounted, IEC flange, from IM 3601 (B35 from B14).	M	M	M	M	M	M	M	NA	NA	NA	NA	NA	NA
309	IM 1001 foot mounted, from IM 3001 (B3 from B5).	M	M	M	M	M	M	M	NA	NA	NA	NA	NA	NA
310	IM 2101 foot/flange mounted, IEC flange, from IM 3001 (B34 from B5).	M	M	M	M	M	M	M	NA	NA	NA	NA	NA	NA
311	IM 2001 foot/flange mounted, IEC flange, from IM 3001 (B35 from B5).	M	M	M	M	M	M	M	NA	NA	NA	NA	NA	NA
312	IM 1001 foot mounted, from IM 2101 (B3 from B34).	M	M	M	M	M	M	M	NA	NA	NA	NA	NA	NA

[1] Certain variant codes cannot be used simultaneously

S = Included as standard.
M = On modification of a stocked motor, or on new manufacture, the number per order may be limited.
P = New manufacture only.
R = On request.
NA = Not applicable.

Code[1]	Variant code	Frame Size 63	71	80	90	100	112	132	160	180	200	225	250	280
315	IM 2001 foot/flange mounted, IEC flange, from IM 2101 (B35 from B34).	M	M	M	M	M	M	M	NA	NA	NA	NA	NA	NA
316	IM 1001 foot mounted, from IM 2001 (B3 from B35).	M	M	M	M	M	M	M	NA	NA	NA	NA	NA	NA
319	IM 2101 foot/flange mounted, IEC flange, from IM 2001 (B34 from B35).	M	M	M	M	M	M	M	NA	NA	NA	NA	NA	NA
Noise reduction														
055	Noise reducing cover.	NA	NA	NA	NA	NA	NA	NA	-	-	-	-	-	-
Painting														
114	Special paint colour, standard grade.	M/P	P	P	P	P	P	P	M	M	M	M	M	M
168	Primer paint only.	NA	NA	NA	P	P	P	P	NA	NA	NA	NA	NA	NA
179	Special paint specification.	R	R	R	R	R	R	R	R	R	R	R	R	R
Protection														
005	Metal protective roof, vertical motor, shaft down.	M	M	M	M	M	M	M	M	M	M	M	M	M
072	Radial seal at D-end.	M	M	M	M	M	M	M	M	M	M	M	M	M
158	Degree of protection IP65.	M	M	M	M	M	M	M	M	M	M	M	M	M
211	Weather protected, IP xx W	NA	NA	NA	P	P	P	P	M	M	M	M	M	M
403	Degree of protection IP56.	M	M	M	M	M	M	M	M	M	M	M	M	M
404	Degree of protection IP56, without fan and fan cover.	NA	NA	NA	P	P	P	P	NA	NA	NA	NA	NA	NA
784	Gamma-seal at D-end.	NA	NA	NA	M	M	M	M	M	M	M	M	M	M
Rating & instruction plates														
002	Restamping voltage, frequency and output, continuous duty.	M	M	M	M	M	M	M	M	M	M	M	M	M
003	Individual serial number.	M	M	M	M	M	M	M	S	S	S	S	S	S
004	Additional text on std rating plate (max 12 digits on free text line).	NA	NA	NA	M	M	M	M	M	M	M	M	M	M
095	Restamping output (maintained voltage, frequency), intermittent duty.	M	M	M	M	M	M	M	M	M	M	M	M	M
098	Stainless rating plate.	M	M	M	M	M	M	M	M	M	M	M	M	M
135	Mounting of additional identification plate, stainless.	M	M	M	M	M	M	M	NA	NA	NA	NA	NA	NA
138	Mounting of additional identification plate, aluminium.	M	M	M	M	M	M	M	M	M	M	M	M	M
139	Additional identification plate delivered loose.	M	M	M	M	M	M	M	M	M	M	M	M	M
160	Additional rating plate affixed.	P	P	P	M	M	M	M	M	M	M	M	M	M
161	Additional rating plate delivered loose.	M	M	M	M	M	M	M	M	M	M	M	M	M
163	Frequency converter rating plate. Rating data according to quotation.	R	R	R	R	R	R	R	M	M	M	M	M	M
198	Aluminum rating plate.	S	S	S	S	S	S	M	S	S	S	S	S	S
Shaft & rotor														
069	Two shaft extensions as per basic catalogue.	NA	NA	NA	P	P	P	P	P	P	P	P	P	P
070	One or two special shaft extensions, standard shaft material.	NA	NA	NA	P	P	P	R	R	R	R	R	R	R
131	Motor delivered with half key (Key not exceeding shaft diameter)	NA	NA	NA	NA	NA	NA	NA	M	M	M	M	M	M
155	Cylindrical shaft extension, D-end, without key-way.	NA	NA	NA	R	R	R	R	NA	NA	NA	NA	NA	NA
165	Shaft extension with open key-way.	NA	NA	NA	NA	NA	NA	NA	P	P	P	P	P	P
410	Stainless steel shaft (standard or non-standard design).	NA	NA	NA	P	P	P	P	P	P	P	P	P	P
Standards and Regulations														
010	Fulfilling CSA Safety Certificate.	P	P	P	P	P	P	NA	M	M	M	M	M	M
011	Fulfilling CSA Energy Efficiency Verification (code 010 included).	NA	NA	NA	NA	NA	NA	NA	M	M	M	M	M	M
408	Fulfilling EPAct certification requirements, CC031A.	NA	NA	NA	R	R	NA	NA	NA	NA	NA	NA	NA	NA
500	Fulfilling Korean MEPS efficiency regulations	NA	NA	NA	NA	NA	NA	NA	R	R	R	R	R	R
540	China energy label	NA	NA	NA	NA	NA	NA	NA	R	R	R	R	R	R
778	GOST Export/Import Certificate (Russia).	NA	NA	NA	M	M	M	M	M	M	M	M	M	M
779	SASO Export/Import Certificate (Saudi Arabia)	NA	NA	NA	NA	NA	NA	NA	M	M	M	M	M	M

[1] Variant codes cannot be used simultaneously

S = Included as standard.
M = On modification of a stocked motor, or on new manufacture, the number per order may be limited.
P = New manufacture only.
R = On request.
NA = Not applicable.

Code[1]	Variant code	Frame Size 63	71	80	90	100	112	132	160	180	200	225	250	280
Stator winding temperature sensors														
120	KTY 84-130 (1 per phase) in stator winding.	NA	NA	NA	NA	NA	NA	NA	R	R	R	R	R	R
121	Bimetal detectors, break type (NCC), (3 in series), 130°C, in stator winding.	M	M	M	M	M	M	M	M	M	M	M	M	M
122	Bimetal detectors, break type (NCC), (3 in series), 150°C, in stator winding.	M	M	M	M	M	M	M	M	M	M	M	M	M
123	Bimetal detectors, break type (NCC), (3 in series), 170°C, in stator winding.	M	M	M	M	M	M	M	M	M	M	M	M	M
124	Bimetal detectors, break type (NCC), (3 in series), 140°C, in stator winding.	NA	NA	NA	NA	NA	NA	NA	M	M	M	M	M	M
125	Bimetal detectors, break type (NCC), (2x3 in series), 150°C, in stator winding.	NA	NA	NA	M	M	M	M	M	M	M	M	M	M
127	Bimetal detectors, break type (NCC), (3 in series, 130°C & 3 in series, 150°C), in stator winding.	NA	NA	NA	M	M	M	M	M	M	M	M	M	M
321	Bimetal detectors, closing type (NO), (3 in parallel), 130°C, in stator winding.	M	M	M	M	M	M	M	NA	NA	NA	NA	NA	NA
322	Bimetal detectors, closing type (NO), (3 in parallel), 150°C, in stator winding.	M	M	M	M	M	M	M	NA	NA	NA	NA	NA	NA
323	Bimetal detectors, closing type (NO), (3 in parallel), 170°C, in stator winding.	NA	NA	NA	P	P	P	P	NA	NA	NA	NA	NA	NA
325	Bimetal detectors, closing type (NO), (2x3 in parallel), 150°C, in stator winding.	NA	NA	NA	P	P	M	M	NA	NA	NA	NA	NA	NA
327	Bimetal detectors, closing type (NO), (3 in parallel, 130°C & 3 in parallel, 150°C), in stator winding.	NA	NA	NA	P	P	M	M	NA	NA	NA	NA	NA	NA
435	PTC - thermistors (3 in series), 130°C, in stator winding.	M	M	M	M	M	M	M	M	M	M	M	M	M
436	PTC - thermistors (3 in series), 150°C, in stator winding.	M	M	M	M	M	M	M	S	S	S	S	S	S
437	PTC - thermistors (3 in series), 170°C, in stator winding.	M	M	M	M	M	M	M	M	M	M	M	M	M
439	PTC - thermistors (2x3 in series), 150°C, in stator winding.	NA	NA	NA	M	M	M	M	M	M	M	M	M	M
440	PTC - thermistors (3 in series, 110°C & 3 in series, 130°C), in stator winding.	NA	NA	NA	P	P	P	P	NA	NA	NA	NA	NA	NA
441	PTC - thermistors (3 in series, 130°C & 3 in series, 150°C), in stator winding.	NA	NA	NA	M	M	M	M	M	M	M	M	M	M
442	PTC - thermistors (3 in series, 150°C & 3 in series, 170°C), in stator winding.	NA	NA	NA	P	P	M	M	M	M	M	M	M	M
445	Pt-100 2-wire in stator winding, 1 per phase	NA	NA	NA	P	P	P	P	M	M	M	M	M	M
446	Pt-100 2-wire in stator winding, 2 per phase	NA	NA	NA	R	R	R	R	M	M	M	M	M	M
Terminal box														
015	Motor supplied in D connection.	M	M	M	M	M	M	M	M	M	M	M	M	M
016	9 terminals in terminal box	NA	NA	NA	P	P	P	P	NA	NA	NA	NA	NA	NA
017	Motor supplied in Y connection.	M	M	M	M	M	M	M	M	M	M	M	M	M
019	Larger than standard terminal box.	NA	NA	NA	NA	NA	NA	NA	R	R	M	M	M	M
021	Terminal box LHS (seen from D-end).	NA	NA	NA	NA	NA	NA	NA	NA	NA	P	P	P	P
022	Cable entry LHS (seen from D-end).	NA	NA	NA	NA	NA	NA	NA	S	S	NA	NA	NA	NA
136	Extended cable connection, standard terminal box.	NA	NA	NA	P	P	P	P	NA	NA	NA	NA	NA	NA
013	Extended cable connection, low terminal box, “Flying leads”.	NA	NA	NA	P	P	P	P	NA	NA	NA	NA	NA	NA
180	Terminal box RHS (seen from D-end).	NA	NA	NA	NA	NA	NA	NA	NA	NA	P	M	M	P
230	Standard metal cable glands.	M	M	M	M	M	M	M	M	M	M	M	M	M
375	Standard plastic cable gland	M	M	M	M	M	M	M	NA	NA	NA	NA	NA	NA
376	Two standard plastic cable glands	M	M	M	M	M	M	M	NA	NA	NA	NA	NA	NA
418	Separate terminal box for auxiliaries, standard material.	NA	NA	NA	NA	R	R	R	M	M	M	M	M	M
467	Lower than standard terminal box and rubber extended cable. Cable length 2m.	NA	NA	NA	NA	NA	NA	NA	P	P	P	P	P	P
729	Aluminum non-drilled flange for cable glands	NA	NA	NA	NA	NA	NA	NA	NA	NA	M	M	M	M

[1] Certain variant codes cannot be used simultaneously

S = Included as standard.
M = On modification of a stocked motor, or on new manufacture, the number per order may be limited.
P = New manufacture only.
R = On request.
NA = Not applicable.

Code[1]	Variant code	Frame Size 63	71	80	90	100	112	132	160	180	200	225	250	280
731	Two standard metal cable glands.	M	M	M	M	M	M	M	M	M	M	M	M	M
739	Prepared for metric cable glands according to DIN 42925, draft aug. 1999.	NA	NA	NA	NA	NA	NA	NA	NA	NA	M	M	M	NA
740	Prepared for PG cable glands.	NA	NA	NA	NA	NA	NA	NA	M	M	M	M	M	M
Testing														
140	Test confirmation.	M	M	M	M	M	M	M	M	M	M	M	M	M
145	Type test report from a catalogue motor, 400V 50Hz.	M	M	M	M	M	M	M	M	M	M	M	M	M
146	Type test with report for one motor from specific delivery batch.	M	M	M	M	M	M	M	M	M	M	M	M	M
147	Type test with report for motor from specific delivery batch, customer witnessed.	M	M	M	M	M	M	M	M	M	M	M	M	M
148	Routine test report.	M	M	M	M	M	M	M	M	M	M	M	M	M
149	Test according to separate test specification.	R	R	R	R	R	R	R	R	R	R	R	R	R
153	Reduced test for classification society.	M	M	M	M	M	M	M	M	M	M	M	M	M
221	Type test and multi-point load test with report for one motor from specific delivery batch.	M	M	M	M	M	M	M	M	M	M	M	M	M
222	Torque/speed curve, type test and multi-point load test with report for one motor from specific delivery batch.	NA	NA	NA	M	M	M	M	M	M	M	M	M	M
760	Vibration level test	M	M	M	M	M	M	M	M	M	M	M	M	M
762	Noise level test for one motor from specific delivery batch.	M	M	M	M	M	M	M	M	M	M	M	M	M
Variable speed drives														
470	Prepared for hollow shaft pulse tacho (L&L equivalent).	R	R	R	R	R	R	R	M	M	M	M	M	M
472	1024 pulse tacho (L&L 861007455-1024).	R	R	R	R	R	R	R	M	M	M	M	M	M
473	2048 pulse tacho (L&L 861007455-2048).	R	R	R	R	R	R	R	M	M	M	M	M	M
474	Separate motor cooling (fan axial, N-end) and prepared for hollow shaft tacho (L&L equivalent).	R	R	R	R	R	R	R	M	M	M	M	M	M
476	Separate motor cooling (fan axial, N-end) and 1024 pulse tacho (L&L 861007455-1024).	R	R	R	R	R	R	R	M	M	M	M	M	M
477	Separate motor cooling (fan axial, N-end) and 2048 pulse tacho (L&L 861007455-2048).	R	R	R	R	R	R	R	M	M	M	M	M	M
570	Prepared for hollow shaft pulse tacho (L&L 503).	R	R	R	R	R	R	R	M	M	M	M	M	M
572	1024 pulse tacho (L&L 503).	R	R	R	R	R	R	R	M	M	M	M	M	M
573	2048 pulse tacho (L&L 503).	R	R	R	R	R	R	R	M	M	M	M	M	M
574	Separate motor cooling (fan axial, N-end) and prepared for hollow shaft tacho (L&L 503).	R	R	R	R	R	R	R	M	M	M	M	M	M
576	Separate motor cooling (fan axial, N-end) and 1024 pulse tacho (L&L 503).	R	R	R	R	R	R	R	M	M	M	M	M	M
577	Separate motor cooling (fan axial, N-end) and 2048 pulse tacho (L&L 503).	R	R	R	R	R	R	R	M	M	M	M	M	M
580	Separate motor cooling, IP44, 400V, 50Hz (fan axial, N-end) and 1024 pulse tacho (L&L 503).	NA	NA	NA	NA	NA	NA	NA	M	M	M	M	M	M
581	Separate motor cooling, IP44, 400V, 50Hz (fan axial, N-end) and 2048 pulse tacho (L&L 503).	NA	NA	NA	NA	NA	NA	NA	M	M	M	M	M	M
661	1024 Pulse tacho mounted, Hohner series 59, 11-30V	NA	R	R	P	P	P	P	NA	NA	NA	NA	NA	NA
662	2048 Pulse tacho mounted, Hohner series 59, 11-30V	NA	R	R	P	P	P	P	NA	NA	NA	NA	NA	NA
701	Insulated bearing at N-end.	NA	NA	NA	NA	NA	NA	NA	P	P	M	M	M	M
704	EMC cable gland.	NA	NA	NA	M	M	M	M	M	M	M	M	M	M
Y/Δ starting														
117	Terminals for Y/Δ start at both speeds (two speed windings).	P	P	P	P	P	P	P	P	P	P	P	P	P

[1] Certain variant codes cannot be used simultaneously

S = Included as standard.
M = On modification of a stocked motor, or on new manufacture, the number per order may be limited.
P = New manufacture only.
R = On request.
NA = Not applicable.

Process performance aluminum motors M3AA 63 - 112
Dimension drawings

Foot-mounted motor;
IM B3 (IM 1001), IM 1002

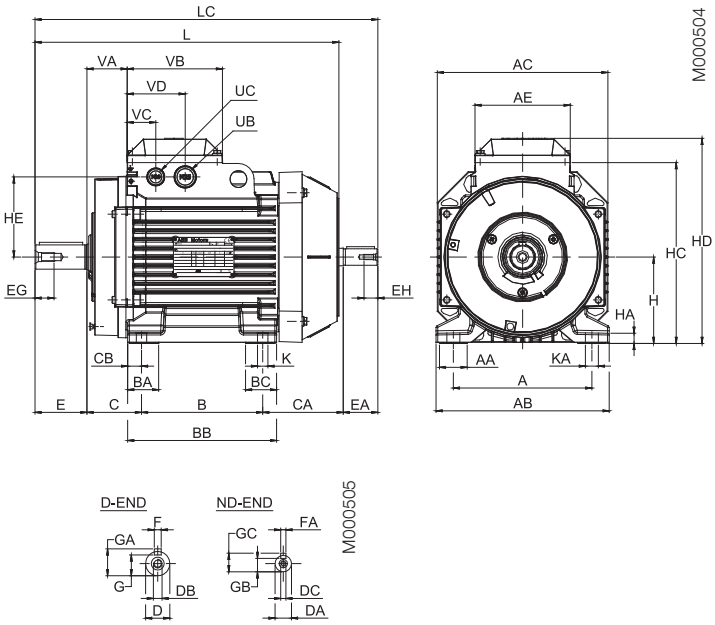

Flange-mounted motor, large flange;
IM B5 (IM 3001), IM 3002

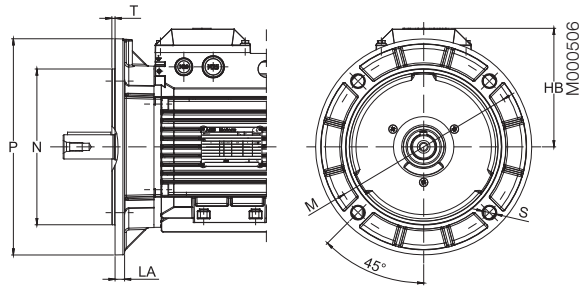

Flange-mounted motor, small flange;
IM B14 (IM 3601)

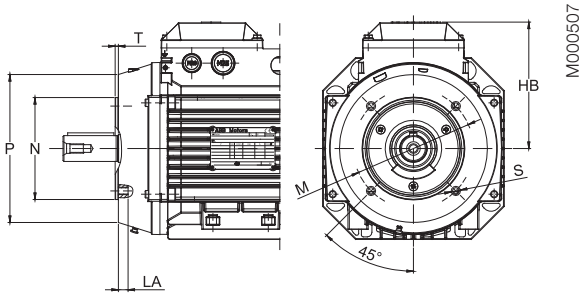

IM B3 (IM 1001), IM 1002

Motor size	A	AA	AB	AC	AE	B	BA	BB	BC	C	CA	CB	D	DA	DB	DC	E	EA	EG	EH	F	FA
63	100	25	120	120	85	80	32	98	32	40	74	10	11	11	M4	M4	23	23	10	10	4	4
71	112	23	136	130	97	90	24.5	110	24.5	45	79.5	10	14	11	M5	M4	30	23	12.5	10	5	4
80	125	27	154	150	97	100	32	125	32	50	80.5	12.5	19	14	M6	M5	40	30	16	12.5	6	5
90S	140	27	170	177	110	100	32	125	32	56	83.5	12.5	24	14	M8	M5	50	30	19	12.5	8	5
90L	140	27	170	177	110	125	32	150	32	56	83.5	12.5	24	14	M8	M5	50	30	19	12.5	8	5
90 LD	140	27	170	177	110	125	32	150	32	56	105.5	12.5	24	14	M8	M5	50	30	19	12.5	8	5
100	160	32	200	197	110	140	36	172	36	63	93	16	28	19	M10	M6	60	40	22	16	8	6
112	190	32	230	197	110	140	36	172	36	70	136	16	28	19	M10	M6	60	40	22	16	8	6

Motor size	G	GA	GB	GC	H	HA	HC	HD	HE	K	KA	L	LC	UB	UC	VA	VB	VC	VD
63	8.5	12.5	8.5	12.5	63	7	120	151	50	7	11	214	237	pg11	M16x1.5	31	92	30.5	61.5
71	11	16	8.5	12.5	71	9	151	180	63.5	7	11	240	267	M20	M20	35			
80	15.5	21.5	11	16	80	10	164.5	193.5	68	10	10	265.5	300.5	M20	M20	37.5	97	30.5	66.5
90S	20	27	11	16	90	10	189	217	82.5	10	14	284.5	319.5	M25	M20	43.5	110	33	67
90L	20	27	11	16	90	10	189	217	82.5	10	14	309.5	344.5	M25	M20	43.5	110	33	67
90 LD	20	27	11	16	90	10	189	217	82.5	10	14	331.5	366.5	M25	M20	43.5	110	33	67
100	24	31	15.5	21.5	100	12	209	237	92.5	12	15	351	396	M25	M20	46.5	110	33	67
112	24	31	15.5	21.5	112	12	221	249	92.5	12	15	393	436	M25	M20	46.5	110	33	67

IM B5 (IM3001), IM 3002

Motor size	HB	LA	M	N	P	S	T
63	103	10	100	80	120	7	3
71	109	9.5	130	130	160	10	3.5
80	113.5	10	165	130	200	12	3.5
90S	127	10	165	130	200	12	3.5
90L	127	10	165	130	200	12	3.5
90 LD	127	10	165	130	200	12	3.5
100	137	11	215	180	250	15	4
112	137	11	215	180	250	15	4

IM B14 (IM 3601), IM 3602

Motor size	HB	LA	M	N	P	S	T
63	103	10	65	50	80	M5	2.5
71	109	11	85	70	105	M6	3
80	113.5	11	100	80	120	M6	3
90S	127	13	115	95	140	M8	3
90L	127	13	115	95	140	M8	3
90 LD	127	13	115	95	140	M8	3
100	137	14	130	110	160	M8	3.5
112	137	14	130	110	160	M8	3.5

Tolerances:

A,B	±0.8	**H**	+0 -0.5
D, DA	ISO j6	**N**	ISO j6
F, FA	ISO h9	**C, CA**	±0.8

Above table gives the main dimensions in mm. For detailed drawings please see our web-pages 'www.abb.com/motors&generators' or contact ABB.

Process performance aluminum motors M3AA 63 - 112
Dimension drawings

Foot- and flange-mounted motor;
IM B35 (IM 2001), IM 2002, large flange

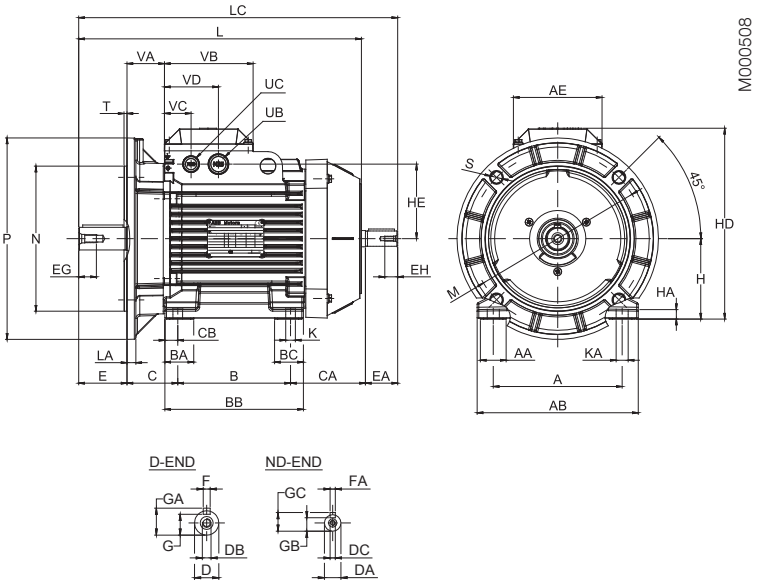

Foot- and flange-mounted motor;
IM B34 (IM 2101), IM 2102, small flange

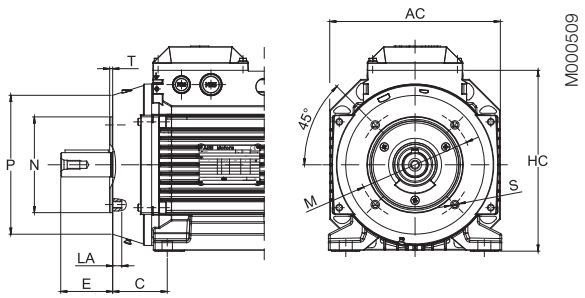

IM B35 (IM 2001), IM 2002; IM B34 (IM2101), IM 2102

Motor size	A	AA	AB	AC	AE	B	BA	BB	BC	C	CA	CB	D	DA	DB	DC	E	EA	EG	EH	F	FA
63	100	25	120	120	85	80	32	98	32	40	74	10	11	11	M4	M4	23	23	10	10	4	4
71	112	23	136	130	97	90	24.5	110	24.5	45	79.5	10	14	11	M5	M4	30	23	12.5	10	5	4
80	125	27	154	150	97	100	32	125	32	50	80.5	12.5	19	14	M6	M5	40	30	16	12.5	6	5
90S	140	27	170	177	110	100	32	125	32	56	83.5	12.5	24	14	M8	M5	50	30	19	12.5	8	5
90L	140	27	170	177	110	125	32	150	32	56	83.5	12.5	24	14	M8	M5	50	30	19	12.5	8	5
90 LD	140	27	170	177	110	125	32	150	32	56	105.5	12.5	24	14	M8	M5	50	30	19	12.5	8	5
100	160	32	200	197	110	140	36	172	36	63	93	16	28	19	M10	M6	60	40	22	16	8	6
112	190	32	230	197	110	140	36	172	36	70	136	16	28	19	M10	M6	60	40	22	16	8	6

Motor size	G	GA	GB	GC	H	HA	HC	HD	HE	K	KA	L	LC	UB	UC	VA	VB	VC	VD
63	8.5	12.5	8.5	12.5	63	7	120	151	50	7	11	214	237	pg11	M16x1.5	31	92	30.5	61.5
71	11	16	8.5	12.5	71	9	151	180	63.5	7	11	240	267	M20	M20	35			
80	15.5	21.5	11	16	80	10	164.5	193.5	68	10	10	265.5	300.5	M20	M20	37.5	97	30.5	66.5
90S	20	27	11	16	90	10	189	217	82.5	10	14	284.5	319.5	M25	M20	43.5	110	33	67
90L	20	27	11	16	90	10	189	217	82.5	10	14	309.5	344.5	M25	M20	43.5	110	33	67
90 LD	20	27	11	16	90	10	189	217	82.5	10	14	331.5	366.5	M25	M20	43.5	110	33	67
100	24	31	15.5	21.5	100	12	209	237	92.5	12	15	351	396	M25	M20	46.5	110	33	67
112	24	31	15.5	21.5	112	12	221	249	92.5	12	15	393	436	M25	M20	46.5	110	33	67

IM B35 (IM2001), IM 2002

Motor size	HB	LA	M	N	P	S	T
63	103	10	100	80	120	7	3
71	109	9.5	130	130	160	10	3.5
80	113.5	10	165	130	200	12	3.5
90S	127	10	165	130	200	12	3.5
90L	127	10	165	130	200	12	3.5
90 LD	127	10	165	130	200	12	3.5
100	137	11	215	180	250	15	4
112	137	11	215	180	250	15	4

IM B34 (IM 2101), IM 2102

Motor size	HB	LA	M	N	P	S	T
63	103	10	65	50	80	M5	2.5
71	109	11	85	70	105	M6	3
80	113.5	11	100	80	120	M6	3
90S	127	13	115	95	140	M8	3
90L	127	13	115	95	140	M8	3
90 LD	127	13	115	95	140	M8	3
100	137	14	130	110	160	M8	3.5
112	137	14	130	110	160	M8	3.5

Tolerances:

A,B	±0.8	**H**	+0 -0.5
D, DA	ISO j6	**N**	ISO j6
F, FA	ISO h9	**C, CA**	±0.8

Above table gives the main dimensions in mm. For detailed drawings please see our web-pages 'www.abb.com/motors&generators' or contact ABB.

Process performance aluminum motors M3AA 71 - 132
Dimension drawings
Special design with two-piece flanges

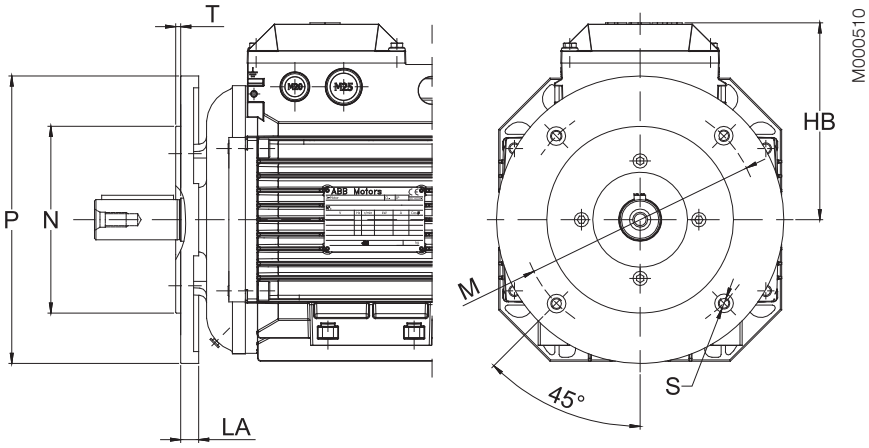

Motor size	IEC flange	Flange dimensions HB	P	M	N	LA	S	T	Variant code FF	FT
71	FT85	105	105	85	70	7.5	M6	2.5	-	218
	FF100/FT100	105	120	100	80	7.5	M6	3	220	219
	FF115/FT115	105	140	115	95	9.5	M8	3	223	224
	FF130/FT130	105	160	130	110	9.5	M8	3.5	226	227
	FF165/FT165	105	200	165	130	10.5	M10	3.5	233	234
80	FT85	110	105	85	70	7.5	M6	2.5	-	218
	FF100/FT100	110	120	100	80	7.5	M6	3	220	219
	FF115/FT115	110	140	115	95	9.5	M8	3	223	224
	FF130/FT130	110	160	130	110	9.5	M8	3.5	226	227
	FF165/FT165	110	200	165	130	10.5	M10	3.5	233	234
90	FT85	127	105	85	70	7.5	M6	2.5	-	218
	FF100/FT100	127	120	100	80	7.5	M6	3	220	219
	FF115/FT115	127	140	115	95	9.5	M8	3	223	224
	FF130/FT130	127	160	130	110	9.5	M8	3.5	226	227
	FF165/FT165	127	200	165	130	10.5	M10	3.5	233	234
100	FF130/FT130	137	160	130	110	9.5	M8	3.5	226	227
	FF165/FT165	137	200	165	130	10.5	M10	3.5	233	234
	FF215/FT215	137	250	215	180	12.5	M12	4	243	244
112	FF130/FT130	137	160	130	110	9.5	M8	3.5	226	227
	FF165/FT165	137	200	165	130	10.5	M10	3.5	233	234
	FF215/FT215	137	250	215	180	12.5	M12	4	243	244
132	FF215/FT215	164	250	215	180	12.5	M12	4	243	244
	FF265/FT265	164	300	265	230	16	M12	4	253	254

[1] Variant code 200 'Flange ring holder' must be added when using the variant codes mentioned below.
[2] Flanges with clearance (FF) or tapped (FT) holes for indicated screws.

Tolerances:

N	ISO j6

Above table gives the main dimensions in mm. For detailed drawings please see our web-pages 'www.abb.com/motors&generators' or contact ABB.

Process performance aluminum motors M3AA 132
Dimension drawings

Foot-mounted motor; IM B 3 (IM 1001), IM 1002

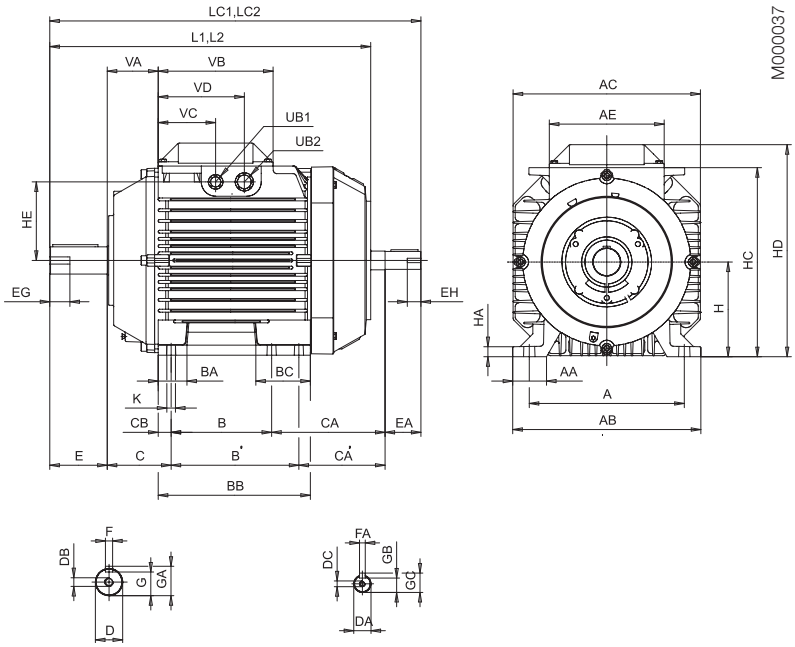

Flange-mounted motor, large flange; IM B 5 (IM 3001), IM 3002

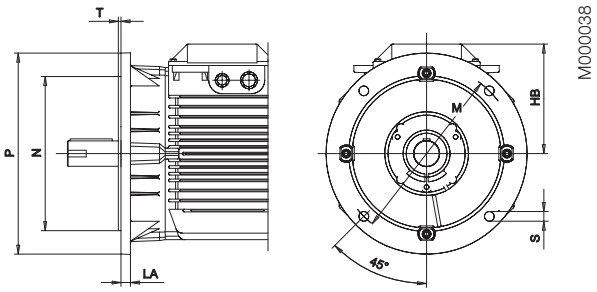

Flange-mounted motor, small flange; IM B 14 (IM 3601), IM 3602

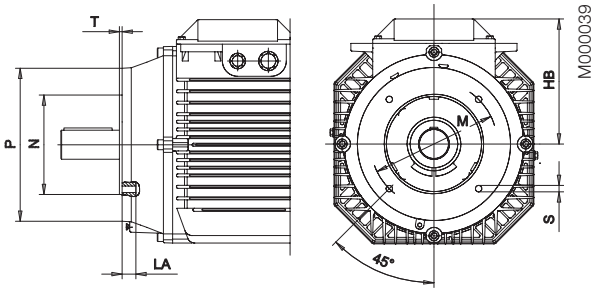

IM B3 (IM 1001), IM 1002

Motor size	A	AA	AB	AC	AE	B	B'	BA	BB	BC	C	CA	CA'	CB	D	DA	DB	DC	E	EA	EG	EH	F	FA
132 [1]	216	47	262	261	160	140	178	40	212	76	89	158	120	18	38	24	M12	M8	80	50	28	19	10	8
132 [2]	216	47	262	261	160	140	178	40	212	76	89	261	223	18	38	24	M12	M8	80	50	28	19	10	8

Motor size	G	GA	GB	GC	H	HA	HC	HD	HE	HF	K	KA	L	LC	UB	UC	UD	VA	VB	VC	VD	VE
132 [1]	33	41	20	27	132	14	263.5	295.5	109.5		12	15	447	517	M20	M25		71	160	80	120	
132 [2]	33	41	20	27	132	14	287	321	123.5	143.5	12	15	550	620	M40	M32	M12	71	160	42	102	136

IM B5 (IM3001), IM 3002

Motor size	HB	LA	M	N	P	S	T
132 [1]	163.5	14	265	230	300	14.5	4
132 [2]	189	14	265	230	300	14.5	4

[1] all typex except [2]
[2] SM_

IM B14 (IM 3601), IM 3602

Motor size	HB	LA	M	N	P	S	T
132 [1]	163.5	14.5	165	130	200	M10	3.5
132 [2]	189	14.5	165	130	200	M10	3.5

Tolerances:

A, B	ISO js14
C, CA	+2 -2
D	ISO k6
DA	ISO j6
F, FA	ISO h9
H	+0 -0.5
N	ISO j6

Above table gives the main dimensions in mm. For detailed drawings please see our web-pages 'www.abb.com/motors&generators' or contact ABB.

Process performance aluminum motors M3AA 132
Dimension drawings

Foot- and flange-mounted motor; IM B 35 (IM 2001), IM 2002, large flange

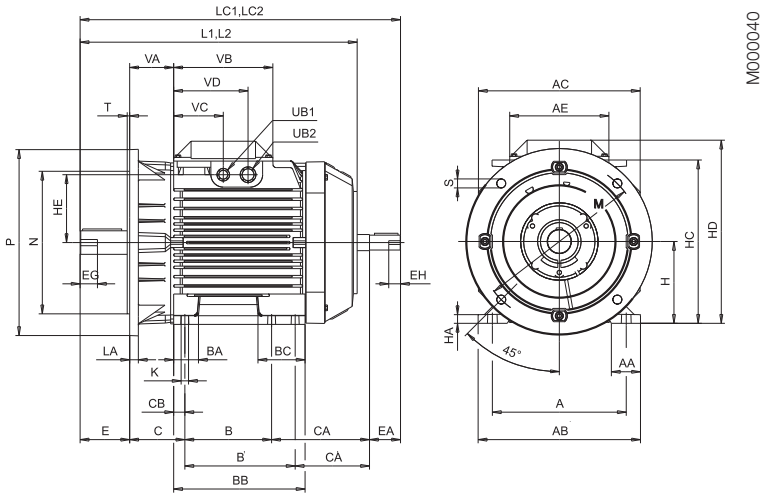

Foot- and flange-mounted motor; IM B 34 (IM 2101), IM 2102, small flange

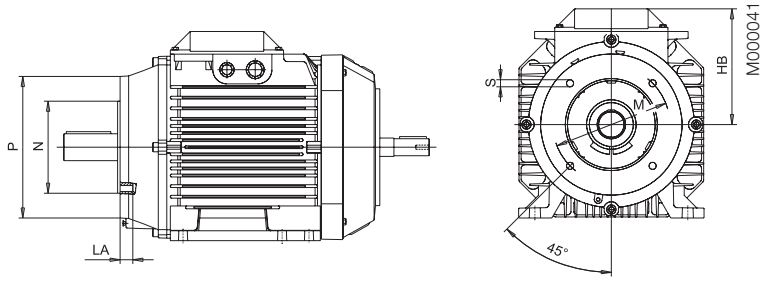

IM B3 (IM 2001), IM 2002

Motor size	A	AA	AB	AC	AE	B	B'	BA	BB	BC	C	CA	CA'	CB	D	DA	DB	DC	E	EA	EG	EH	F	FA
132 [1]	216	47	262	261	160	140	178	40	212	76	89	158	120	18	38	24	M12	M8	80	50	28	19	10	8
132 [2]	216	47	262	261	160	140	178	40	212	76	89	261	223	18	38	24	M12	M8	80	50	28	19	10	8

Motor size	G	GA	GB	GC	H	HA	HC	HD	HE	HF	K	KA	L	LC	UB	UC	UD	VA	VB	VC	VD	VE
132 [1]	33	41	20	27	132	14	263.5	295.5	109.5		12	15	447	517	M20	M25		71	160	80	120	
132 [2]	33	41	20	27	132	14	287	321	123.5	143.5	12	15	550	620	M40	M32	M12	71	160	42	102	136

IM B35 (IM 2001)

Motor size	HB	LA	M	N	P	S	T
132 [1]	163,5	14	265	230	300	14,5	4
132 [2]	189	14	265	230	300	14,5	4

IM B34 (IM 2101)

Motor size	HB	LA	M	N	P	S	T
132 [1]	163,5	14,5	165	130	200	M10	3,5
132 [2]	189	14,5	165	130	200	M10	3,5

[1] all typex except [2]
[2] SM_

Tolerances:

A, B	ISO js14
C, CA	+2 -2
D	ISO k6
DA	ISO j6
F, FA	ISO h9
H	+0 -0.5
N	ISO j6

Above table gives the main dimensions in mm. For detailed drawings please see our web-pages 'www.abb.com/motors&generators' or contact ABB.

Process performance aluminum motors M3AA 160 - 180
Dimension drawings

Foot-mounted motor; IM B3 (IM 1001), IM 1002

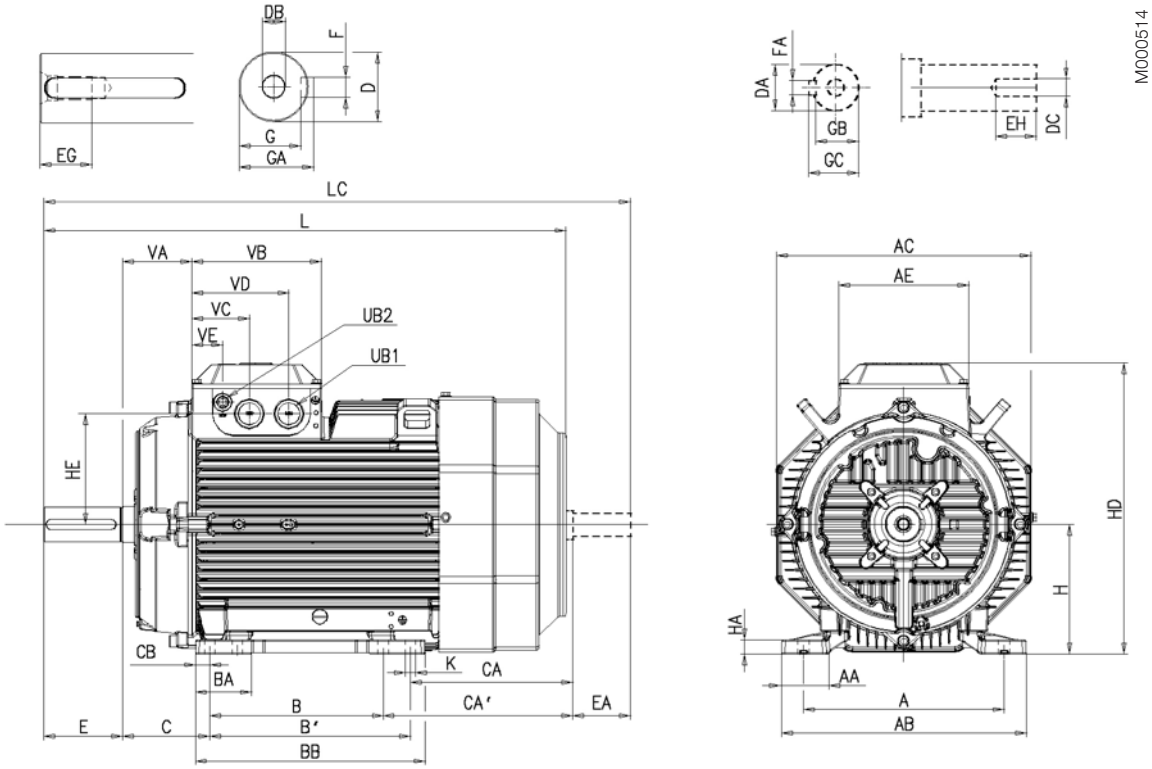

IM B3 (IM 1001), IM 1002

Motor size	A	AA	AB	AC	AE	B	B'	BA	BB	C	CA	CA'	CB	D	DA	DB	DC	E	EA	EG	EH	F
160 [2]	254	54	310	323	180	210	254	84	294	108	172	128	20	42	32	M16	M12	110	80	36	28	12
160 [3]	254	54	310	323	180	210	254	84	294	108	269	225	20	42	32	M16	M12	110	80	36	28	12
180	279	68	341	354	180	241	279	78	319	121	263	225	20	48	32	M16	M12	110	80	36	28	14

Motor size	FA	G	GA	GB	GC	H	HA	HC	HD	HE	K	L	LC	UB1[1]	UB2[1]	VA	VB	VC	VD	VE
160 [2]	10	37	45	27	35	160	20	342	370	139	15	584	680	2*M40	M16	88.5	180	80	135.5	43
160 [3]	10	37	45	27	35	160	20	342	370	139	15	681	777	2*M40	M16	88.5	180	80	135.5	43
180	10	42.5	51.5	27	35	180	20	369	405	154	15	726	815	2*M40	M16	88.5	180	80	135.5	43

[1] Knockout openings.
[2] MLA-2 and MLB-2; MLA-4 poles; MLA-6 poles; MLA-8 and MLB-8 poles.
[3] Remaining variants, i.e. MLC-2, MLD-2 and MLE-2 poles; MLB-4, MLC-4 and MLD-4 poles; MLC-8 poles.

Tolerances:

A, B	ISO js14
C, CA	± 0.8
D, DA	ISO k6
F, FA	ISO h9
H	+0 -0.5

Above table gives the main dimensions in mm. For detailed drawings please see our web-pages 'www.abb.com/motors&generators' or contact ABB.

Process performance aluminum motors M3AA 160 - 180
Dimension drawings

Flange-mounted motor; IM B5 (IM 3001), IM 3002

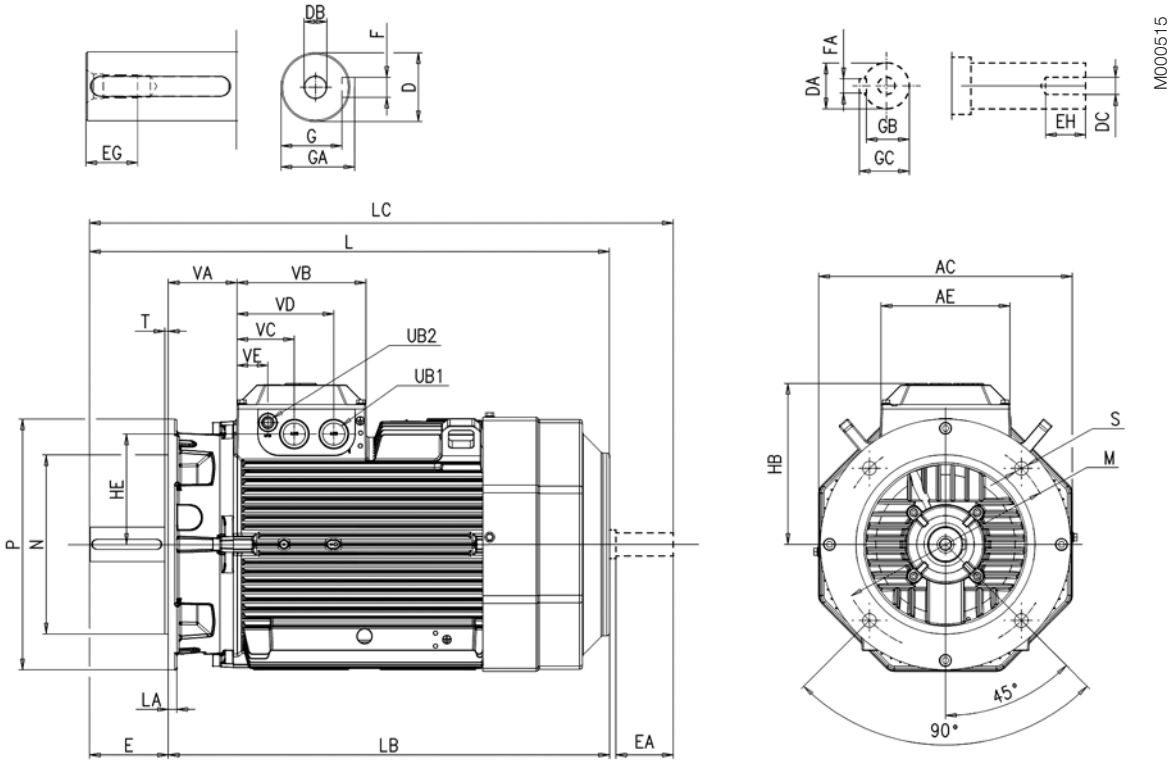

IM B5 (IM 3001), IM 3002

Motor size	AC	AE	D	DA	DB	DC	E[4]	EA	EG	EH	F	FA	G	GA	GB	GC	HB	HE
160 [2]	323	180	42	32	M16	M12	110	80	36	28	12	10	37	45	27	35	210	139
160 [3]	323	180	42	32	M16	M12	110	80	36	28	12	10	37	45	27	35	210	139
180	354	180	48	32	M16	M12	110	80	36	28	14	10	42.5	51.5	27	35	225	154

Motor size	L	LA	LB	LC	M	N	P	S	T	UB1[1]	UB2[1]	VA	VB	VC	VD	VE
160 [2]	584	20	474	680	300	250	350	19	5	2*M40	M16	88.5	180	43	80	135.5
160 [3]	681	20	571	777	300	250	350	19	5	2*M40	M16	88.5	180	43	80	135.5
180	726	15	616	815	300	250	350	19	5	2*M40	M16	88.5	180	43	80	135.5

[1] Knockout openings.
[2] MLA-2 and MLB-2; MLA-4 poles; MLA-6 poles; MLA-8 and MLB-8 poles.
[3] Remaining variants, i.e. MLC-2, MLD-2 and MLE-2 poles; MLB-4, MLC-4 and MLD-4 poles; MLC-8 poles.
[4] Shoulder of shaft extension and contact surface of flange are in same plane.

Tolerances:

D, DA	ISO k6
F, FA	ISO h9
N	ISO j6

Above table gives the main dimensions in mm. For detailed drawings please see our web-pages 'www.abb.com/motors&generators' or contact ABB.

Process performance aluminum motors M3AA 160 - 180
Dimension drawings

Foot- and flange-mounted motor; IM B35 (IM 2001), IM 2002

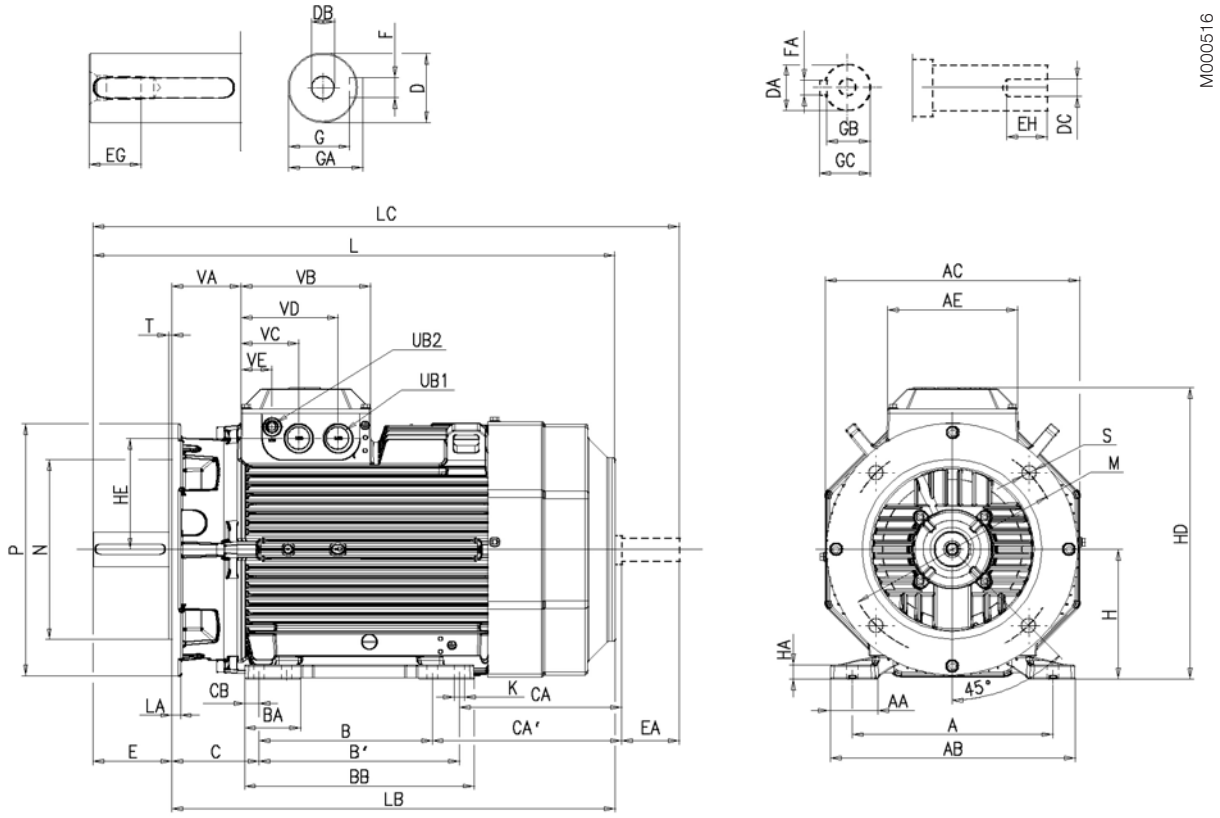

IM B35 (IM 2001), IM 2002

Motor size	A	AA	AB	AC	AE	B	B'	BA	BB	C	CA	CA'	CB	D	DA	DB	DC
160 2)	254	54	310	323	180	210	254	84	294	108	172	128	20	42	32	M16	M12
160 3)	254	54	310	323	180	210	254	84	294	108	269	225	20	42	32	M16	M12
180	279	68	341	354	180	241	279	78	319	121	263	225	20	48	32	M16	M12

Motor size	E[4]	EA	EG	EH	F	FA	G	GA	GB	GC	H	HA	HC	HD	HE	K	L
160 2)	110	80	36	28	12	10	37	45	27	35	160	20	342	370	139	14.5	584
160 3)	110	80	36	28	12	10	37	45	27	35	160	20	342	370	139	14.5	681
180	110	80	36	28	14	10	42.5	51.5	27	35	180	20	369	405	154	14.5	726

Motor size	LA	LB	LC	M	N	P	S	T	UB1[1]	UB2[1]	VA	VB	VC	VD	VE
160 2)	20	474	680	300	250	350	19	5	2*M40	M16	88.5	180	80	135.5	43
160 3)	20	571	777	300	250	350	19	5	2*M40	M16	88.5	180	80	135.5	43
180	15	616	815	300	250	350	19	5	2*M40	M16	88.5	180	80	135.5	43

[1] Knockout openings.
[2] MLA-2 and MLB-2; MLA-4 poles; MLA-6 poles; MLA-8 and MLB-8 poles.
[3] Remaining variants, i.e. MLC-2, MLD-2 and MLE-2 poles; MLB-4, MLC-4 and MLD-4 poles; MLC-8 poles.
[4] Shoulder of shaft extension and contact surface of flange are in same plane.

Tolerances:

A, B	ISO js14
C, CA	±8
D, DA	ISO k6
F, FA	ISO h9
H	+0 - 0.5
N	ISO j6

Above table gives the main dimensions in mm. For detailed drawings please see our web-pages 'www.abb.com/motors&generators' or contact ABB.

Process performance aluminum motors M3AA 200 - 225
Dimension drawings

Foot-mounted motor; IM B3 (IM 1001), IM 1002

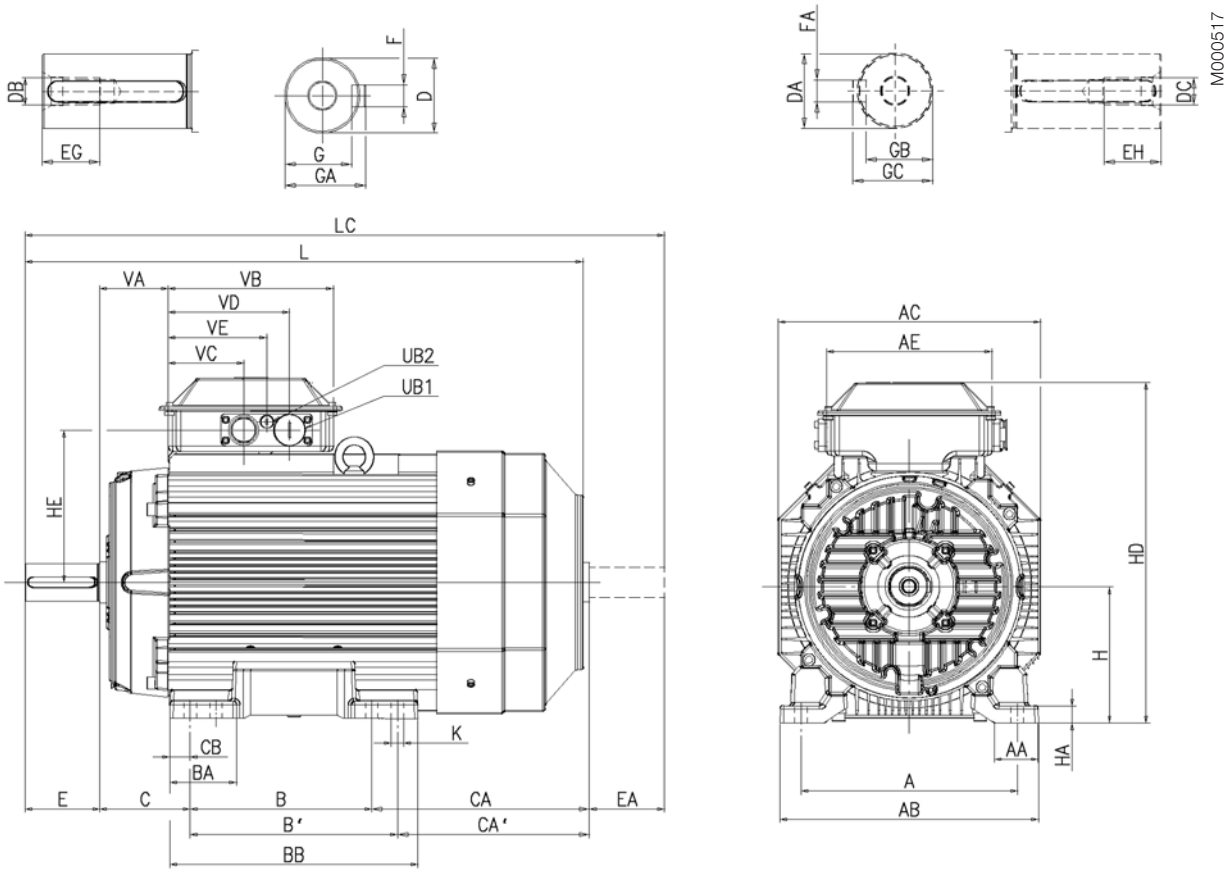

IM B3 (IM 1001), IM 1002

Motor size	A	AA	AB	AC	AE	B	B'	BA	BB	C	CA	CA'	CB	D	DA	DB	DC	E	EA	EG	EH	F	FA
200	318	64	380	386	243	267	305	112	365	133	314	276	30	55	45	M20	M16	110	110	42	36	16	14
225-2 p	356	69	418	425	243	286	311	102	365	149	314	289	24.5	55	55	M20	M20	110	110	42	42	16	14
225 4-8 p	356	69	418	425	243	286	311	102	365	149	314	289	24.5	60	55	M20	M20	140	110	42	42	18	16

Motor size	G	GA	GB	GC	H	HA	HD[2]	HD[3]	HE[2]	HE[3]	K	L	LC	UB[1]	VA	VB	VC[2]	VC[3]	VD[2]	VD[3]	VE[2]	VE[2]
200	49	59	39.5	48.5	200	25	500	532	224	239	18	821	934	2xFL13	101	243	112	77	179	167	145	122
225-2 p	49	59	49	59	225	25	547	579	244.5	260	18	850	971	2xFL13	93.5	243	112	77	179	167	145	122
225 4-8 p	53	64	49	59	225	25	547	579	244.5	260	18	880	1001	2xFL13	93.5	243	112	77	179	167	145	122

Tolerances:

A,B	ISO js14
C, CA	± 0.8
D 55-65	ISO m6
DA 45-55	ISO k6
F, FA	ISO h9
H	+0 -0.5

[1] Flange opening is provided with pipe flange FL 13, with tapped lead-in holes plugged with sealing plugs. Single- and two-speed motors: 2 x M40 + M16. Motors for 230VD 50Hz or 225 SMC-2, 225 SMD-2, 225 SMD-4 have pipe flange FL21 and 2 x M63 + M16

[2] For flange opening FL13: 2 x M40 + M16

[3] For extra large flange opening FL21: 2 x M63 + M16

Above table gives the main dimensions in mm. For detailed drawings please see our web-pages 'www.abb.com/motors&generators' or contact ABB.

Process performance aluminum motors M3AA 200 - 225
Dimension drawings

Flange-mounted motor; IM B5 (IM 3001), IM 3002

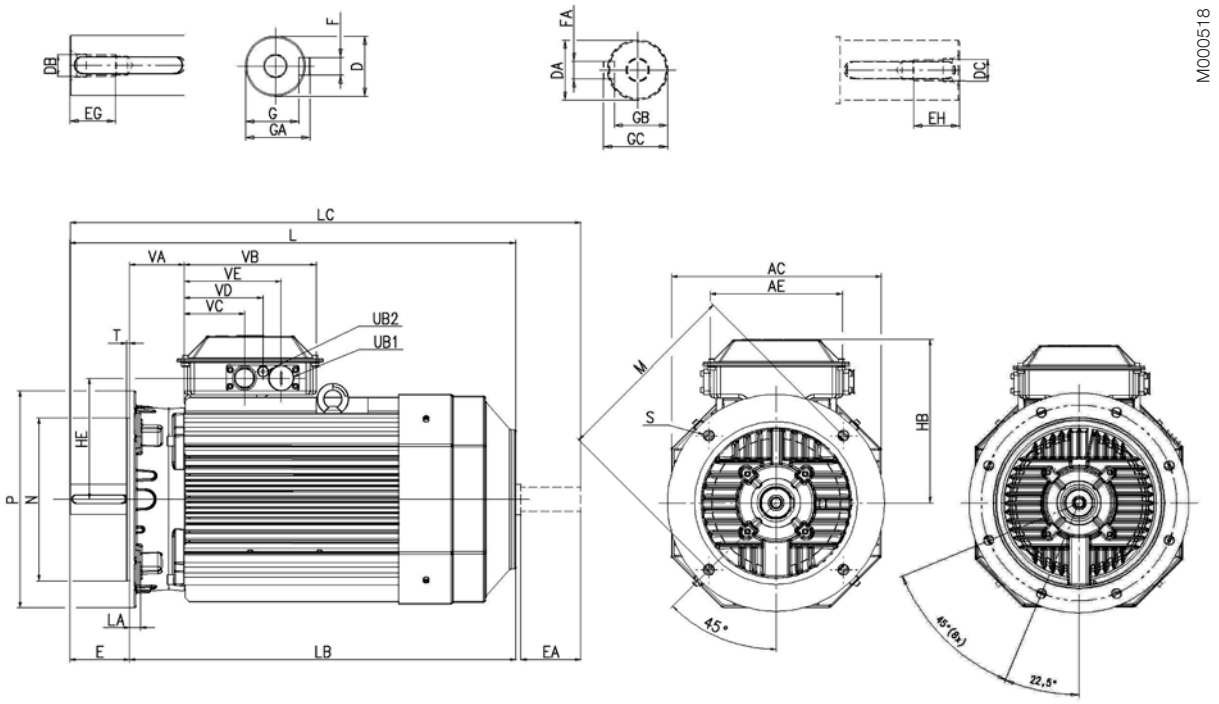

IM B5 (IM 3001), IM 3002

Motor size	AC	AE	D	DA	DB	DC	E1)	EA	EG	EH	F	FA	G	GA	GB	GC	HB[3]	HB[4]	HE[3]	HE[4]
200	386	243	55	45	M20	M16	110	110	42	36	14	16	49	59	39.5	48.5	300	332	224	239
225-2 p	425	243	55	55	M20	M20	110	110	42	42	16	16	49	59	49	59	300	332	244	260
225 4-8 p	425	243	60	55	M20	M20	140	110	42	42	16	16	53	64	49	59	322	354	244	260

Motor size	L	LA	LB	LC	M	N	P	S	T	UB[2]	VA	VB	VC[3]	VC[4]	VD[3]	VD[4]	VE[3]	VE[4]
200	821	20	711	934	350	300	400	19	5	2xFL13	101	243	112	77	179	167	145	122
225-2 p	850	22	740	971	400	350	450	19	5	2xFL13	93.5	243	112	77	179	167	145	122
225 4-8 p	880	22	740	1001	400	350	450	19	5	2xFL13	93.5	243	112	77	179	167	145	122

Tolerances:

D 55-65	ISO m6
DA 45-55	ISO k6
F, FA	ISO h9
N	ISO j6

1) Shoulder of shaft extension and contact surface of flange are in the same plane.
2) Flange opening is provided with pipe flange FL 13, with tapped lead-in holes plugged with sealing plugs. Single- and two-speed motors: 2 x M40 + M16. Motors for 230VD 50Hz or 225 SMC-2, 225 SMD-2, 225 SMD-4 have pipe flange FL21 and 2 x M63 + M16
3) For flange opening FL13: 2 x M40 + M16
4) For extra large flange opening FL21: 2 x M63 + M16

Above table gives the main dimensions in mm. For detailed drawings please see our web-pages 'www.abb.com/motors&generators' or contact ABB.

Process performance aluminum motors M3AA 200 - 225
Dimension drawings

Foot- and flange-mounted motor; IM B35 (IM 2001), IM 2002

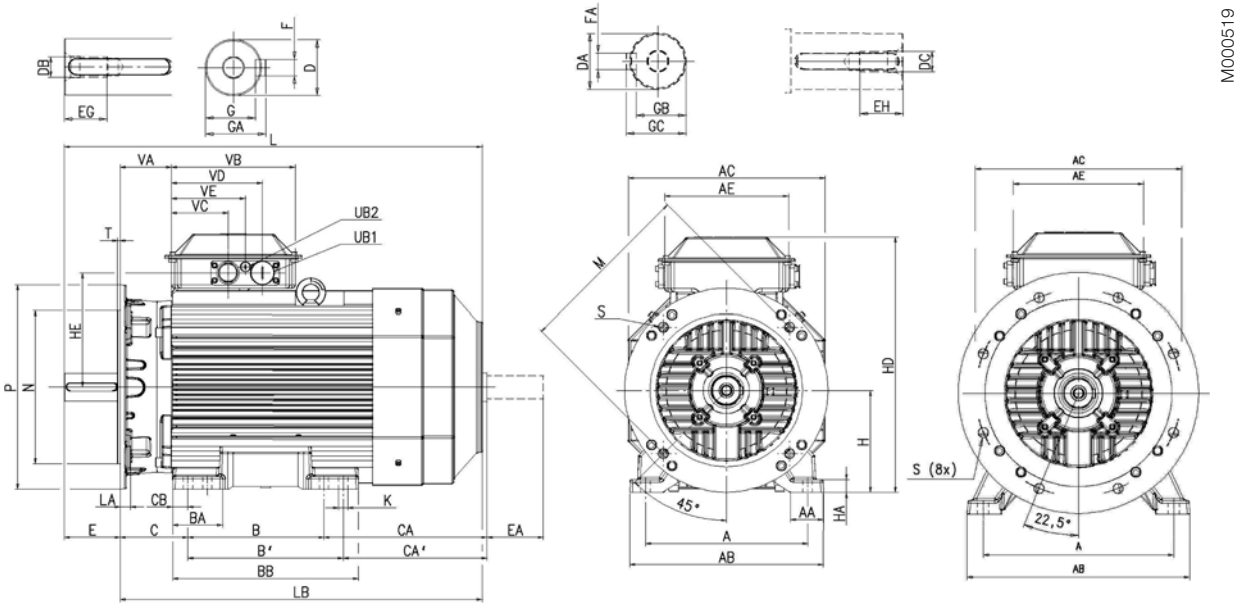

M3AA 200 M3AA 225

IM B35 (IM 2001), IM 2002

Motor size	A	AA	AB	AC	AE	B	B'	BA	BB	C	CA	CA'	CB	D	DA	DB	DC	E[1]	EA	EG	EH	F	FA	G	GA	GB	GC
200	318	64	380	386	243	267	305	112	365	133	314	276	30	55	45	M20	M16	110	110	42	36	16	14	49	59	39.5	48.5
225-2 p	356	69	418	425	243	286	311	102	365	149	314	289	24.5	55	55	M20	M20	110	110	42	42	16	14	49	59	49	59
225 4-8 p	356	69	418	425	243	286	311	102	365	149	314	289	24.5	60	55	M20	M20	140	110	42	42	18	16	53	64	49	59

Motor size	H	HA	HD[3]	HD[4]	HE[3]	HE[4]	K	L	LA	LB	LC	M	N	P	S	T	UB[2]	VA	VB	VC[3]	VC[4]	VD[3]	VD[4]	VE[3]	VE[4]
200	200	25	500	532	223	239	18	821	20	711	934	350	300	400	19	5	2xFL13	101	243	112	77	179	167	145	122
225-2 p	225	25	547	579	244	260	18	850	22	740	971	400	350	450	19	5	2xFL13	93.5	243	112	77	179	167	145	122
225 4-8 p	225	25	547	579	244	260	18	880	22	740	1001	400	350	450	19	5	2xFL13	93.5	243	112	77	179	167	145	122

[1] Shoulder of shaft extension and contact surface of flange are in the same plane.
[2] Flange opening is provided with pipe flange FL 13, with tapped lead-in holes plugged with sealing plugs.
Single- and two-speed motors: 2 x M40 + M16.
Motors for 230VD 50Hz or 225 SMC-2, 225 SMD-2, 225 SMD-4 have pipe flange FL21 and 2 x M63 + M16
[3] For flange opening FL13: 2 x M40 + M16
[4] For extra large flange opening FL21: 2 x M63 + M16

Tolerances:

A, B	ISO js14
C, CA	± 0.8
D 55-75	ISO m6
DA 45-55	ISO k6
F, FA	ISO h9
H	+0 -0.5
N	ISO j6

Above table gives the main dimensions in mm. For detailed drawings please see our web-pages 'www.abb.com/motors&generators' or contact ABB.

Process performance aluminum motors M3AA 250 - 280
Dimension drawings

Foot-mounted motor; IM B3 (IM 1001), IM 1002

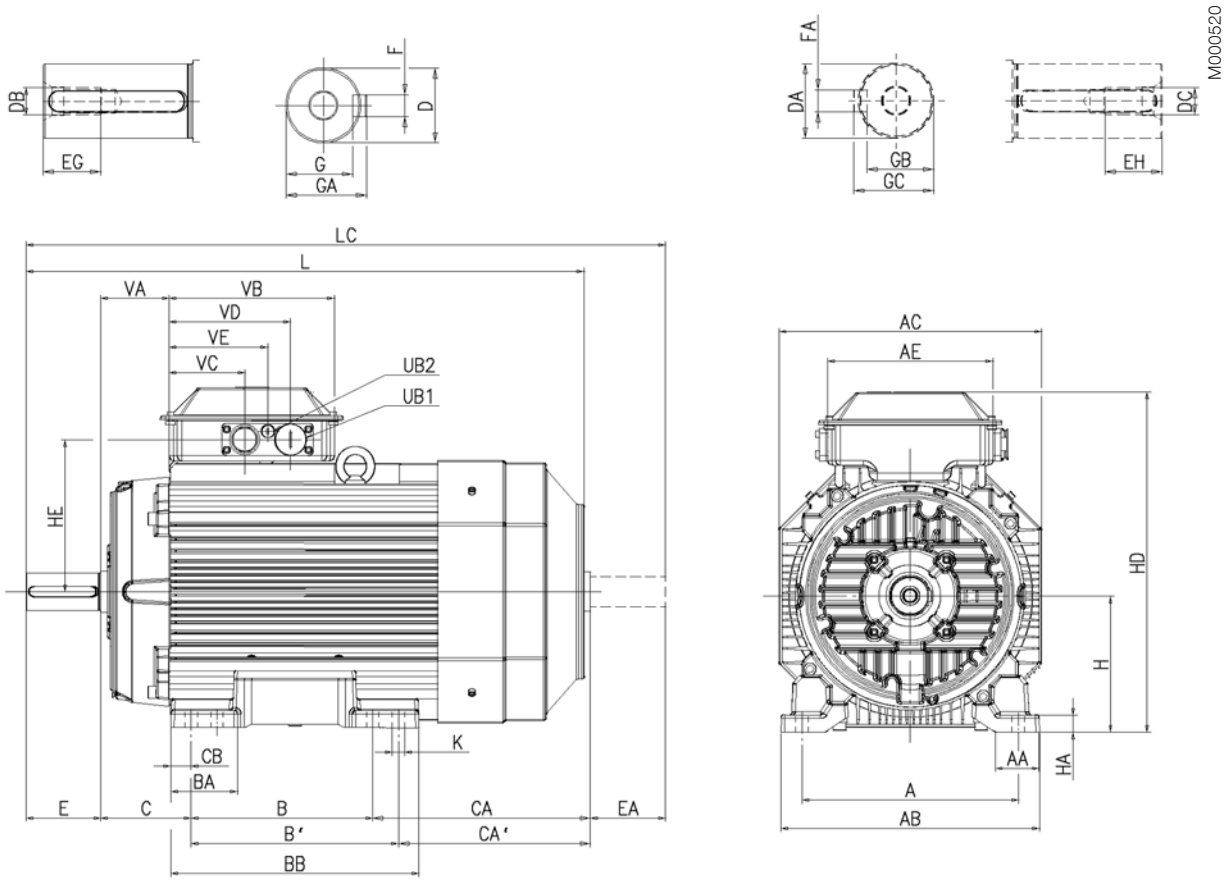

IM B3 (IM 1001), IM 1002

Motor size	A	AA	AB	AC	AE	B	B'	BA	BB	C	CA	CA'	CB	D	DA	DB	DC	E	EA	EG	EH	F	FA
250 -2 p	406	78	473	471	243	311	349	106	409	168	281	243	40	60	55	M20	M20	140	110	42	42	18	16
250 4-8 p	406	78	473	471	243	311	349	106	409	168	281	243	30	65	55	M20	M20	140	110	42	42	18	16
280 -2 p	457	102.5	522	471	243	368	419	92	489	190	202	151	37.5	65	55	M20	M20	140	110	42	42	18	16
280 4-8 p	457	102.5	522	471	243	368	419	92	489	190	202	151	37.5	75	55	M20	M20	140	110	42	42	20	16

Motor size	G	GA	GB	GC	H	HA	HD[2]	HD[3]	HE[2]	HE[3]	K	L	LC	UB[1]	VA	VB	VC[3]	VC[4]	VD[3]	VD[4]	VE[3]	VE[4]
250 -2 p	53	64	49	59	250	30	594	627	268	284	22	884	1010	2xFL13	93.5	243	112	77	179	167	145	122
250 4-8 p	58	69	49	59	250	30	594	627	268	284	22	884	1010	2xFL13	93.5	243	112	77	179	167	145	122
280 -2 p	58	69	49	59	280	40	-	657	-	284	24	884	1010	2xFL21	93.5	243	-	77	-	167	-	122
280 4-8 p	67.5	79.5	49	59	280	40	-	657	-	284	24	884	1010	2xFL21	93.5	243	-	77	-	167	-	122

Tolerances:

A, B	ISO js14
C, CA	± 0.8
D 55-75	ISO m6
DA 45-55	ISO k6
F, FA	ISO h9
H	+0 -0.5

[1] Flange opening is provided with pipe flange FL 13, with tapped lead-in holes plugged with sealing plugs. .
Single- and two-speed motors: 2 x M40 + M16.
Motors for 230VD 50Hz or 250 SMC-2, 250 SMC-4 and all 280 have pipe flange FL21 and 2 x M63 + M16
[2] For flange opening FL13: 2 x M40 + M16
[3] For extra large flange opening FL21: 2 x M63 + M16

Above table gives the main dimensions in mm. For detailed drawings please see our web-pages 'www.abb.com/motors&generators' or contact ABB.

Process performance aluminum motors M3AA 250 - 280
Dimension drawings

Flange-mounted motor; IM B5 (IM 3001), IM 3002

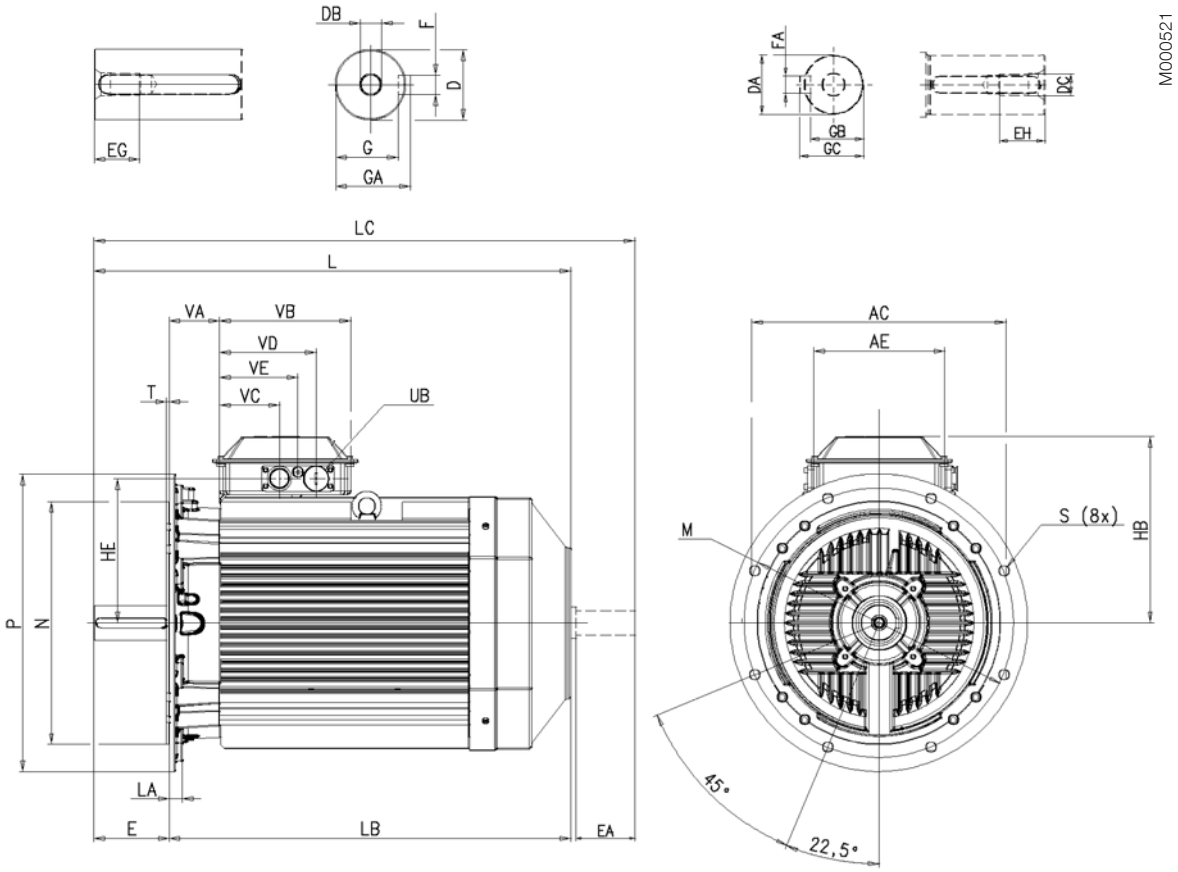

IM B5 (IM 3001), IM 3002

Motor size	AC	AE	D	DA	DB	DC	E[1]	EA	EG	EH	F	FA	G	GA	GB	GC	HB[3]	HB[4]	HE[3]	HE[4]
250 -2 p	471	243	60	55	M20	M20	140	110	42	42	18	16	53	64	49	59	344	377	268	284
250 4-8 p	471	243	65	55	M20	M20	140	110	42	42	18	16	58	69	49	59	344	377	268	284
280 -2 p	471	243	65	55	M20	M20	140	110	42	42	18	16	58	69	49	59	-	377	-	284
280 4-8 p	471	243	75	55	M20	M20	140	110	42	42	20	16	67.5	79.5	49	59	-	377	-	284

Motor size	L	LA	LB	LC	M	N	P	S	T	UB[2]	VA	VB	VC[3]	VC[4]	VD[3]	VD[4]	VE[3]	VE[4]
250 -2 p	884	24	744	1010	500	450	550	19	5	2xFL13	93.5	243	112	77	179	167	145	122
250 4-8 p	884	24	744	1010	500	450	550	19	5	2xFL13	93.5	243	112	77	179	167	145	122
280 -2 p	884	24	744	1010	500	450	550	19	5	2xFL21	93.5	243	-	77	-	167	-	122
280 4-8 p	884	24	744	1010	500	450	550	19	5	2xFL21	93.5	243	-	77	-	167	-	122

Tolerances:

D 55-75	ISO m6
DA 45-55	ISO k6
F, FA	ISO h9
N	ISO j6

[1] Shoulder of shaft extension and contact surface of flange are in the same plane.
[2] Flange opening is provided with pipe flange FL 13, with tapped lead-in holes plugged with sealing plugs.
Single- and two-speed motors: 2 x M40 + M16.
Motors for 230VD 50Hz or 250 SMC-2, 250 SMC-4 and all 280 have pipe flange FL21 and 2 x M63 + M16
[3] For flange opening FL13: 2 x M40 + M16
[4] For extra large flange opening FL21: 2 x M63 + M16

Above table gives the main dimensions in mm. For detailed drawings please see our web-pages 'www.abb.com/motors&generators' or contact ABB.

Process performance aluminum motors M3AA 250 - 280
Dimension drawings

Foot- and flange-mounted motor; IM B35 (IM 2001), IM 2002

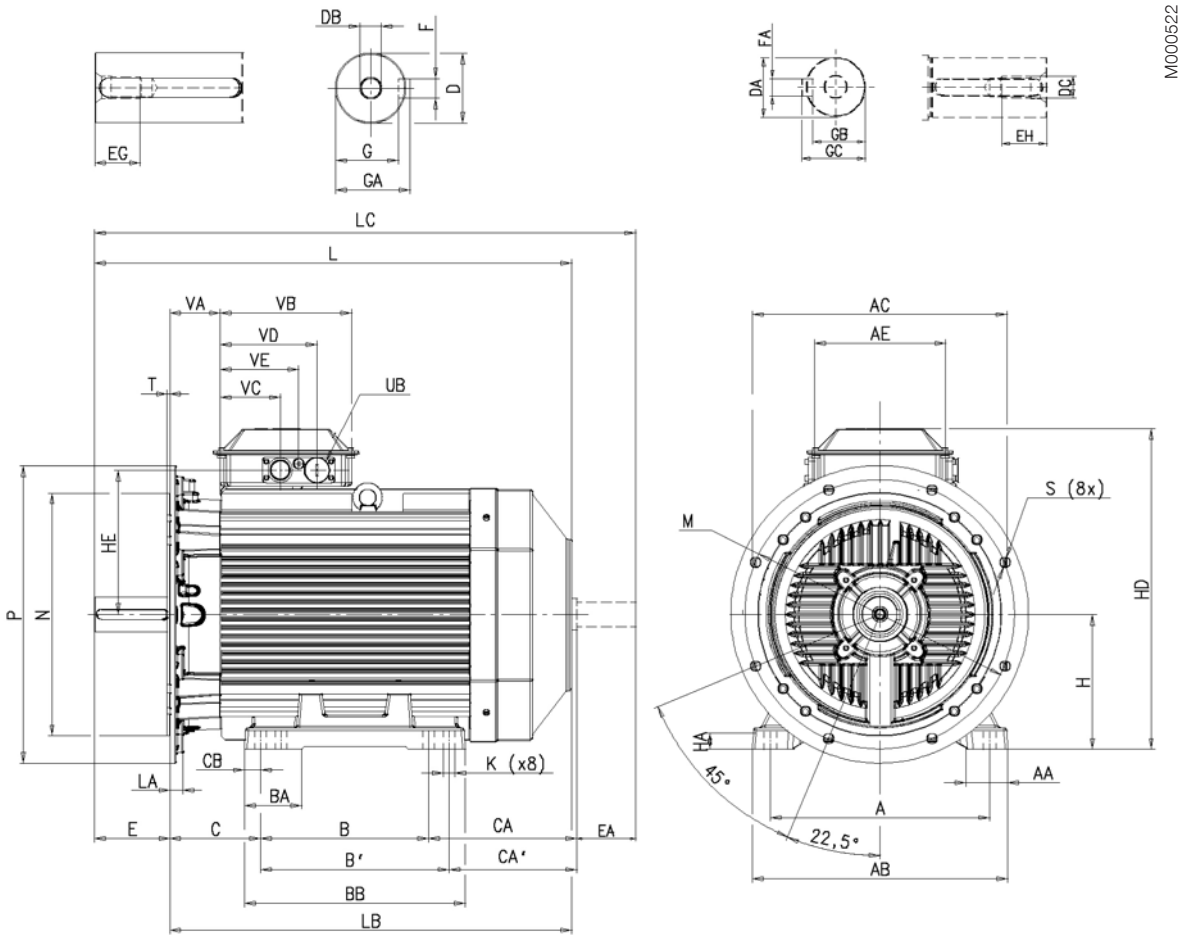

IM B35 (IM 2001), IM 2002

Motor size	A	AA	AB	AC	AE	B	B'	BA	BB	C	CA	CA'	CB	D	DA	DB	DC	E[1]	EA	EG	EH	F	FA	G	GA	GB	GC
250 -2 p	406	78	474	471	243	311	349	106	409	168	281	243	40	60	55	M20	M20	140	110	42	42	18	16	53	64	49	59
250 4-8 p	406	78	474	471	243	311	349	106	409	168	281	243	30	65	55	M20	M20	140	110	42	42	18	16	58	69	49	59
280 -2 p	457	103	525	471	243	368	419	92	489	190	202	151	38	65	55	M20	M20	140	110	42	42	18	16	58	69	49	59
280 4-8 p	457	103	525	471	243	368	419	92	489	190	202	151	38	75	55	M20	M20	140	110	42	42	20	16	68	80	49	59

Motor size	H	HA	HD[3]	HD[4]	HE[3]	HE[4]	K	L	LA	LB	LC	M	N	P	S	T	UB[2]	VA	VB	VC[3]	VC[4]	VD[3]	VD[4]	VE[3]	VE[4]
250 -2 p	250	30	594	627	268	284	22	884	24	744	1010	500	450	550	19	5	2xFL13	93	243	112	77	179	167	145	122
250 4-8 p	250	30	594	627	268	284	22	884	24	744	1010	500	450	550	19	5	2xFL13	93	243	112	77	179	167	145	122
280 -2 p	280	40	-	657	-	284	24	884	24	744	1010	500	450	550	19	5	2xFL21	93	243	-	77	-	167	-	122
280 4-8 p	280	40	-	657	-	284	24	884	24	744	1010	500	450	550	19	5	2xFL21	93	243	-	77	-	167	-	122

[1] Shoulder of shaft extension and contact surface of flange are in the same plane.
[2] Flange opening is provided with pipe flange FL 13, with tapped lead-in holes plugged with sealing plugs. Single- and two-speed motors: 2 x M40 + M16. Motors for 230VD 50Hz or 250 SMC-2, 250 SMC-4 and all 280 have pipe flange FL21 and 2 x M63 + M16
[3] For flange opening FL13: 2 x M40 + M16
[4] For extra large flange opening FL21: 2 x M63 + M16

Tolerances:

A, B	ISO js14
C, CA	± 0.8
D 55-75	ISO m6
DA 45-55	ISO k6
F, FA	ISO h9
H	+0 -0.5
N	ISO js6

Above table gives the main dimensions in mm. For detailed drawings please see our web-pages 'www.abb.com/motors&generators' or contact ABB.

Accessories

Protective roof and variable speed drives

Protective roof
Variant code 005

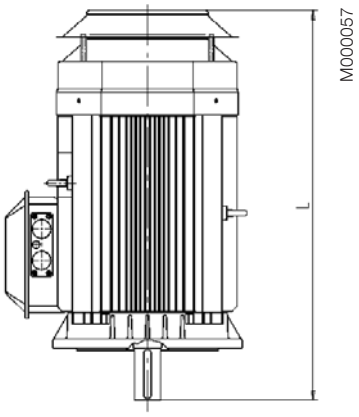

Tacho
Variant codes; 472, 473, 572 and 573

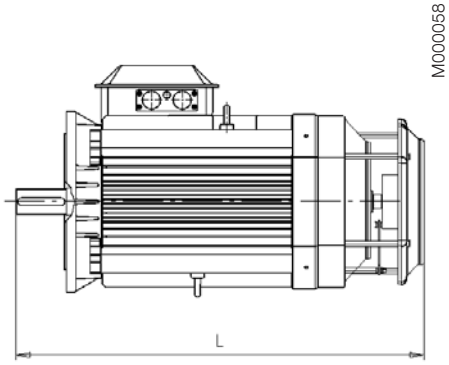

Separate cooling with or without tacho
Variant codes; 183, 474, 476, 477, 189, 574, 576 and 577

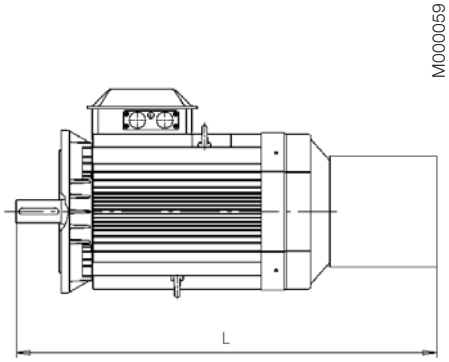

M3AA	Variant codes 005	183	189	472, 473 572, 573	474, 476 477, 574 576, 577
Motor size	L	L	L	L	L
63 to 132	[1]	[1]	[1]	[1]	[1]
160 [2]	635	996	851	668	996
160 [3]	732	1093	948	765	1093
180	779	1143	998	811	1143
200	875	1274	1129	918	1274
225 [4]	902	1307	1162	946	1307
225 [5]	932	1337	1192	976	1337
250	937	1351	1206	982	1351
280	937	1351	1206	982	1351

[1] On request.
[2] MLA-2, MLB-2 and MLC-2 poles; MLA-4 poles; MLA-6 poles; MLA-8 and MLB-8 poles.
[3] Remaining variants, i.e. MLD-2 and MLE-2 poles; MLB-4, MLC-4 and MLD-4 poles; MLC-8 poles.
[4] 2-poles
[5] 4-8 poles

Slide rails for motor sizes 160 to 280

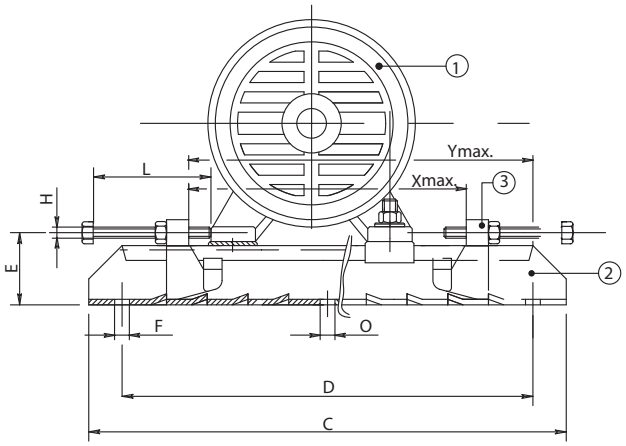

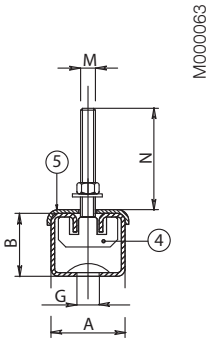

① Motor
② Rail
③ Movable adjusting bolt
④ Fixing bolt, motor
⑤ Plate

Motor size	Type	Product code 3GZV103001-	A	B	C	D	E	F	G	H	L	M	N	O	Xmax	Ymax	weight kg
[1]																	
160-180	TT180/12	-14	75	42	700	630	57	17	26	M12	120	M12	50	-	520	580	12.0
200-225	TT225/16	-15	82	50	864	800	68	17	27	M16	140	M16	65	17	670	740	20.4
250-280	TT280/20	-16	116	70	1072	1000	90	20	27	M18	150	M20	80	20	870	940	43.0

[1] Smaller sizes on request.

Each set includes two complete slide rails including screw for mounting the motor on the rails. Screws for mounting the rails on the foundation are not included. Slide rails are supplied with unmachined lower surfaces and should, prior to tightenng down, be supported in a suitable manner.

Process performance aluminum motors in brief

Size	M3AA	63	71	80	90	100	112	132
Stator and feet	Material	Diecast aluminum alloy						
	Paint colour shade	Munsell blue 8B 4.5/3.25 / NCS 4822 B05G						
	Surface treatment	Polyester powder paint, ≥ 30µm						
Feet		Fixed feet						
	Material	Aluminum alloy, integrated with stator.						
Bearing end shields	Material	Diecast aluminum alloy						
	Paint colour shade	Munsell blue 8B 4.5/3.25 / NCS 4822 B05G						
	Surface treatment	Polyester powder paint, ≥ 30µm						
Bearings	D-end	6202-2Z/C3	6203-2Z/C3	6204-2Z/C3	6205-2Z/C3	6306-2Z/C3	6306-2Z/C3	6208-2Z/C3 [1] 6308-2Z/C3 [2]
	N-end	6201-2Z/C3	6202-2C/C3	6203-2Z/C3	6204-2Z/C3	6205-2Z/C3	6205-2Z/C3	6206-2Z/C3
				[1] all types except [2]. [2] SM_				
Axially-locked bearings	Inner bearing cover	D-end internal retaining ring			D-end			
Bearing seals	D-end	V-ring						
	N-end	Labyrinth seal.						
Lubrication		Permanently lubricated shielded bearings.						
		Grease temperature range -40°C to +160°C.						
Terminal box	Material	Diecast aluminum alloy, base integrated with stator.						
	Surface treatment	Similar to stator.						
	Screws	Steel 5G. Galvanised.						
Connections	Knock-out openings	1xM16xPg11	2 x (M20 + M20)		2x(M20+M25)			2x(M20+M25) [1] 2x(M40+M32+M12) [2]
		[1] types S, SB, M, MA. 2) types SC, MC, SMA, SMB, SMC, SMD, SME						
	Max Cu-area mm^2	2.5	4		6			10 [1] 32 [2]
	Terminal box	Cable lugs, 6 terminals			Screw terminals, 6 terminals			Cable lugs, 6 terminals
Fan	Material	Polypropylene. Reinforced with 20% glass fibre.						
Fan cover	Material	Polypropylene						
Stator winding	Material	Copper.						
	Insulation	Insulation class F.						
	Winding protection	Optional.						
Rotor winding	Material	Diecast aluminum						
Balancing method		Half key balancing						
Key ways		Closed keyway						
Heating elements	On request	8 W		25 W				
Enclosure		IP 55.						
Cooling method		IC 411						
Drain holes		Drain holes with closable plastic plugs, open on delivery.						

Process performance aluminum motors in brief

Size	M3AA	160	180	200	225	250	280
Stator	Material	Diecast aluminum alloy.		Extruded aluminum alloy.			
	Paint colour shade	Munsell blue 8B 4.5/3.25 / NCS 4822 B05G					
	Surface treatment	Polyester powder paint, ≥ 100 µm					
Feet	Material	Aluminum alloy, bolted to the stator		Cast iron, bolted to the stator			
Bearing end shields	Material	Cast iron EN-GJL-200/GG 20/GRS 200					
	Paint colour shade	Munsell blue 8B 4.5/3.25 / NCS 4822 B05G					
	Surface treatment	Two-pack epoxy paint,thickness ≥ 100 µm		Two-pack epoxy paint, thickness ≥ 100 µm			
Bearings	D-end	6309-2Z/C3	6310-2Z/C3	6312-2Z/C3	6313-2Z/C3	6315-2Z/C3	6316/C3[1]
	N-end	6209-2Z/C3	6209-2Z/C3	6210-2Z/C3	6212-2Z/C3	6213-2Z/C3	6213/C3
		[1] 6315/C3 for 2-pole motors					
Axially-locked bearings	Inner bearing cover	As standard locked at D-end					
Bearing seals		Axial seal as standard					
Lubrication		Permanently lubricated shielded bearings. Wide temperature range grease.					Relubrication. Grease temp. range -40 to 150°C.
Terminal box	Material	Diecast aluminum alloy,base integrated with stator.		Deep-drawn steel sheet, bolted to stator.			
	Surface treatment	Similar to stator.		Phosphated. Polyester paint.			
	Screws	Steel 8.8, zinc electroplated and chromated					
Connections	Knock-out openings	(2 x M40 + M16) + (2 x M40)		2 x FL13, 2 x M40 + 1 x M16			2 x FL21
	Flange-openings			Voltage code S; 2 x FL21, 2 x M63 + 1 x M16			2 x M63 1 x M16
	Screws	M6		M10			
	Max Cu-area mm^2	35		70			
Terminal box		6 terminals for connection with cable lugs (not included)					
Fan	Material	Polypropylene. Reinforced with 20% glass fibre.					
Fan cover	Material	Hot dip galvanized steel					
	Paint colour shade	Blue, Munsell 8B 4.5/3.25 / NCS 4822 B05G					
	Surface treatment	Polyester powder paint, thickness ≥ 100 µm					
Stator winding	Material	Copper.					
	Insulation	Insulation class F.					
	Winding protection	3 PTC thermistors as standard, 150°C.					
Rotor winding	Material	Diecast aluminum.					
Balancing method		Half key balancing.					
Key ways		Closed keyway					
Heating elements	Optional	25 W	50 W				
Enclosure		IP 55					
Cooling method		IC 411					

Process performance premium efficiency cast iron motors

Totally enclosed squirrel cage three phase low voltage motors

Sizes 160 to 355, 11 to 355 kW

www.abb.com/motors&generators

> Low voltage motors

>> Process performance motors

Mechanical design

Mechanical design, dimension drawings and other data are the same for low voltage premium efficiency motors as for Process performance motors except for the following parts:

- Bearings
- Permissible loadings on shaft

Bearings

The motors are normally fitted with single-row deep groove ball bearings as listed in the table below.

If the bearing at the D-end is replaced with a roller bearing (NU- or NJ-), higher radial forces can be handled. Roller bearings are suitable for belt drive applications.

When there are high axial forces, angular-contact ball bearings should be used. This option is available on request. When a motor with angular-contact ball bearings is ordered, the method of mounting and direc-tion and magnitude of the axial force must be specified. For special bearings, please see the variant codes.

Basic version with deep groove ball bearings

Motor size	Number of poles	Deep groove ball bearings D-end	N-end
160	2-12	6309/C3	6209/C3
180	2-12	6310/C3	6209/C3
200	2-12	6312/C3	6210/C3
225	2-12	6313/C3	6212/C3
250	2-12	6315/C3	6213/C3
280	2	6316/C3	6316/C3
	4-12	6316/C3	6316/C3
315	2	6316/C3	6316/C3
	4-12	6319/C3	6316/C3
355	2	6316M/C3	6316M/C3
	4-12	6322/C3	6316/C3

[1] On request

Version with roller bearings, variant code 037

Motor size	Number of poles	Roller bearings, variant code 037 D-end
160	2-12	NU 309
180	2-12	NU 310
200	2-12	NU 312
225	2-12	NU 313
250	2-12	NU 315
280	2	[1]
	4-12	NU 316/C3
315	2	[1]
	4-12	NU 319/C3
355	2	[1]
	4-12	NU 322/C3

Axially-locked bearings

The outer bearing ring at the D-end can be axially locked with an inner bearing cover. The inner ring is locked by tight tolerance to the shaft.

All motors are equipped as standard with an axially-locked bearing at the D-end.

Transport locking

Motors that have roller bearings or an angular contact ball bearing are fitted with a transport lock before despatch to prevent damage to the bearings during transport. In case of transport locked bearing, motor sizes 280 to 355 are provided with a warning sign.

Locking may also be fitted in other cases where transport conditions are suspected of being potentially damaging.

Bearing seals

The size and type of seals for sizes 160 to 450 are in accordance with the table below:

Motor size	Number of poles	Standard design Axial seal D-end	N-end	Alternative design Radial seal (DIN 3760) Variant code 072	
160	2-12	RB45	V-45A	45x62x8	
180	2-12	RB50	RB45	50x68x8	
200	2-12	RB60	V-50A	60x80x8	Axial seal:
225	2-12	RB65	V-60A	65x85x10	RB45...75 = Gamma-ring
250	2-12	RB75	V-65A	75x95x10	V50...95 = V-ring

Motor size	Number of poles	Standard design D-end	N-end	Alternative design D-end	N-end
280	2	Labyrinth seal	Labyrinth seal	-	Labyrinth seal
280	4-12	Labyrinth seal	Labyrinth seal	Labyrinth seal Radial seal 80x110x10	Labyrinth seal Radial seal 80x110x10
315	2	Labyrinth seal	Labyrinth seal	-	Labyrinth seal
315SM, ML	4-12	Labyrinth seal	Labyrinth seal	Labyrinth seal Radial seal 95x125x10	Labyrinth seal Radial seal 80x110x10
315LK	4-12	Labyrinth seal	Labyrinth seal	-	Labyrinth seal Radial seal 80x110x10
355	2	Labyrinth seal	Labyrinth seal		Labyrinth seal
355	4-12	Labyrinth seal	Labyrinth seal	-	Labyrinth seal

Motor sizes 160-250

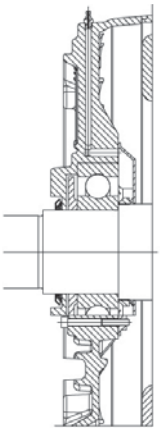

Motor sizes 280-355

Labyrinth seal

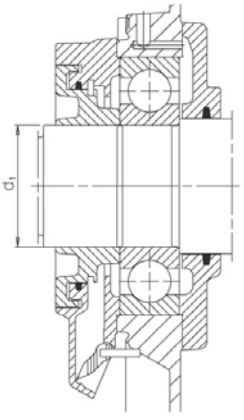

Radial seal

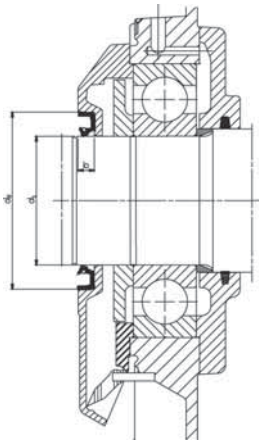

Bearing life

The nominal life L_{10h} of a bearing is defined according to ISO 281 as the number of operating hours achieved or exceeded by 90% of identical bearings in a large test series under certain specified conditions. 50% of the bearings achieve at least five times this figure.

The calculated bearing life L_{10h} for power transmission by means of a coupling (horizontal machine):

Motor sizes 280 to 355 ≥ 200,000 hours.

Lubrication

On delivery, the motors are ready lubricated with high quality grease. The recommended grease used can be seen from ABB's Low Voltage Motors Manual delivered together with the motor or for frame sizes 160-450 from the lubrication plate fastened to the motor frame. See example of a lubrication plate on page 32.

Motors with permanently greased bearings

Motors with frame sizes 160-250 can be equipped with permanently greased bearings. Bearings are lubricated with high quality, high temperature grease. Bearing types are mentioned in the rating plates.

The following values can be used as a guide for bearing lifetime, depending on application and load conditions:
4-8 pole motors about 40,000 h
2 pole motors about 20,000 h

Lubrication intervals

ABB follows the L_1-principle in defining lubrication interval. That means that 99% of the motors are sure to make the interval time. The lubrication intervals can also be calculated according to the L_{10}-principle, which are normally doubled compared to L_1-values. Values available from ABB at request.

Lubrication method in cast iron motors

M4BP 160-355	Regreasable bearings as standard solution
M4BP 160-250	Permanent greased bearings as an option

Motors with relubrication nipples

For sizes 280 to 355 the bearing system has been built so that a valve disc can be used to ease the lubrication. Motors are lubricated while running.

Grease outlet opening has closing valves at both ends. This should be opened before greasing and closed 1-2 hours after regreasing. After lubrication close the valves.This ensures that the construction is tight and dust or dirt cannot get inside the bearing.

As an option, a grease collection method can be used.

The table below gives lubrication intervals according to the L_1-principle for different speeds, ambient temperature of 25°C. The values are valid for horizontal mounted motors (B3), with about 80°C bearing temperature and using high quality grease with lithium complex soap and mineral or PAO-oil.

For more information, see ABB's Low Voltage Motors Manual.

Lubrication intervals according to L_1 principle

Frame size	Amount of grease g/bearing	kW	3600 r/min	3000 r/min	kW	1800 r/min	1500 r/min	kW	1000 r/min	kW	500-900 r/min
Ball bearings											
Lubrication intervals in duty hours											
160	25	≤ 18,5	9000	12000	≤ 15	18000	21500	≤ 11	24000	all	24000
160	25	> 18,5	7500	10000	> 15	15000	18000	> 11	22500	all	24000
180	30	≤ 22	7000	9000	≤ 22	15500	18500	≤ 15	24000	all	24000
180	30	> 22	6000	8500	> 22	14000	17000	> 15	21000	all	24000
200	40	≤ 37	5500	8000	≤ 30	14500	17500	≤ 22	23000	all	24000
200	40	> 37	3000	5500	> 30	10000	12000	> 22	16000	all	20000
225	50	≤ 45	4000	6500	≤ 45	13000	16500	≤ 30	22000	all	24000
225	50	> 45	1500	2500	> 45	5000	6000	> 30	8000	all	10000
250	60	≤ 55	2500	4000	≤ 55	9000	11500	≤ 37	15000	all	18000
250	60	> 55	1000	1500	> 55	3500	4500	> 37	6000	all	7000
280	60	all	2000	3500	-	-	-	-	-	-	-
280	60	-	-	-	all	8000	10500	all	14000	all	17000
280	35	all	1900	3200		-	-		-		-
280	40		-	-	all	7800	9600	all	13900	all	15000
315	35	all	1900	3200		-	-		-		-
315	55		-	-	all	5900	7600	all	11800	all	12900
355	35	all	1900	3200		-	-		-		-
355	70		-	-	all	4000	5600	all	9600	all	10700

For motors M4BP 160 to 250 the interval may be increased by 30 %, up to a maximum of three calendar years.
The values in table above are valid also for sizes M4BP 280 to 355.

Frame size	Amount of grease g/bearing	kW	3600 r/min	3000 r/min	kW	1800 r/min	1500 r/min	kW	1000 r/min	kW	500-900 r/min
Roller bearings											
Lubrication intervals in duty hours											
160	25	≤ 18,5	4500	6000	≤ 15	9000	10500	≤ 11	12000	all	12000
160	25	> 18,5	3500	5000	> 15	7500	9000	> 11	11000	all	12000
180	30	≤ 22	3500	4500	≤ 22	7500	9000	≤ 15	12000	all	12000
180	30	> 22	3000	4000	> 22	7000	8500	> 15	10500	all	12000
200	40	≤ 37	2750	4000	≤ 30	7000	8500	≤ 22	11500	all	12000
200	40	> 37	1500	2500	> 30	5000	6000	> 22	8000	all	10000
225	50	≤ 45	2000	3000	≤ 45	6500	8000	≤ 30	11000	all	12000
225	50	> 45	750	1250	> 45	2500	3000	> 30	4000	all	5000
250	60	≤ 55	1000	2000	≤ 55	4500	5500	≤ 37	7500	all	9000
250	60	> 55	500	750	> 55	1500	2000	> 37	3000	all	3500
280	60	all	1000	1750	-	-	-	-	-	-	-
280	70	-	-	-	all	4000	5250	all	7000	all	8500
280	35	all	900	1600		-	-		-		-
280	40		-	-	all	4000	5300	all	7000	all	8500
315	35	all	900	1600		-	-		-		-
315	55		-	-	all	2900	3800	all	5900	all	6500
355	35	all	900	1600		-	-		-		-
355	70		-	-	all	2000	2800	all	4800	all	5400

For motors M4BP 160 to 250 the interval may be increased by 30 %, up to a maximum of three calendar years.
The values in table above are valid also for sizes M4BP 280 to 355.

Pulley diameter

When the desired bearing life has been determined, the minimum permissible pulley diameter can be calculated using FR, as follows:

$$D = \frac{1.9 \cdot 10^7 \cdot K \cdot P}{n \cdot F_R}$$

where:

D = diameter of pulley, mm
P = power requirement, kW
n = motor speed, r/min
K = belt tension factor, dependent on belt type and type of duty. A common value for V-belts is 2.5.
FR = permissible radial force

Permissible loadings on shaft

The tables give the permissible radial forces in Newtons, assuming zero axial force, ambient temperature 25°C.
The values are based on normal conditions at 50 Hz and calculated bearing lives for motor sizes 160 to 355 of 20,000 and 40,000 hours.
Motors are foot-mounted IM B3 version with force directed sideways. In some cases the strength of the shaft affects the permissible forces. At 60 Hz the values must be reduced by 10%. For two-speed motors, the values must be based on the higher speed.

Permissible loads of simultaneous radial and axial forces will be supplied on request.

If the radial force is applied between points X_0 and X_{max}, the permissible force F_R can be calculated from the following formula:

$$F_R = F_{X0} - \frac{X}{E}(F_{X0} - F_{Xmax})$$

E = length of shaft extension in basic version

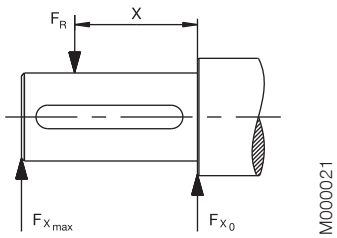

Permissible radial forces
Motor sizes 160 to 355

Motor size	Poles	Length of shaft extension E (mm)	Ball bearings 20,000 hours F_{X0} (N)	F_{Xmax} (N)	40,000 hours F_{X0} (N)	F_{Xmax} (N)	Roller bearings 20,000 hours F_{X0} (N)	F_{Xmax} (N)	40,000 hours F_{X0} (N)	F_{Xmax} (N)
160 MLA	2	110	3540	2740	2955	2285	7100	4300	6140	4300
	4	110	4000	3100	3325	2570	8000	4300	6870	4300
	6	110	4170	3200	3440	2655	8600	4300	7270	4300
	8	110	4600	3585	3855	2985	9300	4300	7955	4300
160 MLB	2	110	3540	2740	2955	2270	7085	4300	6070	4300
	4	110	4085	3300	3370	2725	8300	4300	7055	4300
	6	110	4100	3355	3400	2755	8600	4300	7300	4300
	8	110	4200	3270	3455	2670	9000	4300	7570	4300
160 MLC	2	110	3400	2600	2855	2200	6800	4300	5885	4300
	4	110	3700	3000	3070	2485	7800	4300	6640	4300
	6	110	3600	2900	2870	2325	8000	4300	6700	4300
	8	110	4170	3370	3370	2725	9000	4300	7585	4300
	4	110	3400	2755	2755	2240	7600	4300	6370	4300
160 MLE	2	110	3185	2570	2640	2140	6785	4300	5770	4300
180 MLA	2	110	4100	3385	3455	2825	8125	5500	7025	5500
	4	110	4270	3485	3525	2885	8600	5500	7300	5500
	6	110	4700	3800	3855	3155	9400	5500	7900	5500
	8	110	4785	3900	3870	3170	9800	5500	8255	5500
180 MLB	2	110	4170	3400	3470	2825	7900	5500	6770	5500
	4	110	4185	3400	3440	2810	8500	5500	7200	5500
	6	110	4370	3570	3525	2885	9000	5500	7600	5500
180 MLC	4	110	3700	3055	3010	2470	7900	5500	6655	5440

Motor sizes 160 to 355

Motor size	Poles	Length of shaft extension E (mm)	Ball bearings 20,000 hours F_{x0} (N)	FX_{max} (N)	40,000 hours F_{x0} (N)	FX_{max} (N)	Roller bearings 20,000 hours F_{x0} (N)	FX_{max} (N)	40,000 hours F_{x0} (N)	FX_{max} (N)
200 MLA	2	110	5600	4685	4700	3925	10900	9100	9470	7900
	4	110	6285	5200	5240	4370	12500	9550	10700	8900
	6	110	6800	5700	5700	4770	13600	9550	11670	9550
	8	110	6800	5700	5600	4685	14100	9550	12000	9550
200 MLB	2	110	5670	4700	4700	3925	11000	9200	9500	7900
	4	110	5700	4700	4700	3925	12000	9550	10185	8500
	6	110	6400	5370	5300	4425	13200	9550	11200	9385
200 MLC	2	110	5000	4185	4185	3500	10400	8700	8900	7455
	4	110	5400	4500	4425	3685	11600	9550	9800	8200
	6	110	5800	4885	4740	3955	12500	9550	10600	8800
200 MLD	2	110	4985	4170	4170	3485	10400	8700	8900	7400
225 SMA	2	110	6400	5400	5355	4500	13300	10700	11500	9700
	4	140	7300	5900	6155	4970	15400	10250	13200	10250
	6	140	7600	6200	6370	5140	16400	10250	14000	10250
	8	140	8500	6900	7100	5725	17900	10250	15300	10250
225 SMB	2	110	6100	5185	5155	4340	13000	10700	11200	9455
	4	140	7085	5700	5885	4755	15100	10250	12900	10250
	6	140	7100	5700	5840	4700	16000	10250	13500	10250
	8	140	8000	6485	6600	5340	17300	10250	14700	10250
225 SMC	2	110	5600	4700	4685	3940	12600	10600	10770	9070
	4	140	6400	5200	5300	4285	14500	10250	12385	10000
225 SMD	2	110	5500	4640	4600	3880	12420	10460	10640	8960
	4	140	5800	4700	4725	3800	13500	10250	11400	9270
250 SMA	2	140	7700	6285	6500	5285	17100	10900	14900	10900
	4	140	8700	7000	7300	5900	19800	13800	17000	13785
	6	140	9400	7600	7800	6355	21600	13800	18400	13800
	8	140	9600	7800	7900	6400	22700	13800	19300	13800
250 SMB	2	140	7100	5800	6000	4885	16700	10900	14400	10900
	4	140	7800	6300	6470	5240	18900	13800	16200	13100
	6	140	8900	7200	7355	5955	21200	13800	18000	13800
250 SMC	2	140	6800	5500	5670	4600	16300	10900	14000	10900
	4	140	7400	6000	6055	4900	18100	13800	15400	12485
	6	140	8200	6600	6670	5400	20300	13800	17200	13800
280 SM_	2	140	7350	6150	5800	4900	20350	6350	16550	6350
	4	140	9150	7700	7250	6100	24750	9750	20100	9750
	6	140	10450	8800	8300	6950	27950	9750	22650	9750
315 SM_	2	140	7350	6250	5800	4950	20350	6300	16500	6300
	4	170	11350	9400	9000	7450	32750	10250	26550	10250
	6	170	13000	10250	10300	8500	36950	10250	30000	10250
315 ML_	2	140	7400	6200	5050	5800	20550	6200	16700	6200
	4	170	11350	9600	8950	7600	32700	14650	26550	14650
	6	170	11000	12950	8650	10250	36950	14650	30000	14650
315 LK_	2	140	7450	6050	5850	5150	20800	6050	16850	6050
	4	170	11450	9900	9000	7800	33150	14400	26900	14400
	6	170	11300	13050	8850	10250	37450	14400	30350	14400
355 SM_	2	140	7350	6450	5800	5100	20700	7550	16750	7550
	4	210	15100	12350	11900	9850	45100	14650	36650	14650
	6	210	17250	14300	13600	11300	50950	14700	41350	14700
355 ML_	2	140	7400	6550	5750	5100	20800	7450	16850	7450
	4	210	15200	12800	11950	10050	45500	14550	36900	14550
	6	210	17350	14500	13650	11500	51350	14500	41700	14500
355 LK_	6	210	17450	13950	13650	11850	52100	13950	42250	13950

Permissible axial forces

The following tables give the permissible axial forces in Newton, assuming zero radial force, ambient temperature 25°C. The values are based on normal conditions at 50 Hz with standard bearings and calculated bearing lives of 20,000 and 40,000 hours. At 60 Hz the values are to be reduced by 10%. For two-speed motors, the values are to be based on the higher speed. The permissible loads of simultaneous radial and axial forces will be supplied on request. Given axial forces F_{AD}, assumes D-bearing locked by means of locking ring.

Mounting arrangement IM B3

Motor size	20,000 hours 2-pole FAD N	FAZ N	4-pole FAD N	FAZ N	6-pole FAD N	FAZ N	40,000 hours 2-pole FAD N	FAZ N	4-pole FAD N	FAZ N	6-pole FAD N	FAZ N
160 MLA	2850	2850	3450	3450	3690	3690	2325	2325	2775	2775	2970	2970
160 MLB	2850	2850	3435	3435	3600	3600	2325	2325	2760	2760	2880	2880
160 MLC	2775	2775	3150	3150	3135	3135	2280	2280	2535	2535	2490	2490
160 MLD	2865	2865	2900	2900	-	-	2330	2330	2320	2320	-	-
160 MLE	2500	2500	-	-	-	-	2025	2025	-	-	-	-
180 MLA	3300	3300	3600	3600	4140	4140	2700	2700	2920	2920	3320	3320
180 MLB	3340	3340	3580	3580	3800	3800	2725	2725	2900	2900	3040	3040
180 MLC	-	-	3220	3220	-	-	-	-	2560	2560	-	-
200 MLA	4460	4460	5000	5260	5000	5860	3640	3640	4260	4260	4720	4720
200 MLB	4440	4440	4720	4720	5000	5480	3620	3620	3840	3840	4420	4420
200 MLC	3940	3940	4480	4480	4980	4980	3180	3180	3620	3620	3980	3980
200 MLD	3940	3940	-	-	-	-	3200	3200	-	-	-	-
225 SMA	4980	4980	5000	6080	5000	6520	4060	4060	4920	4920	5000	5260
225 SMB	4860	4860	5000	5880	5000	6020	3960	3960	4780	4780	4840	4840
225 SMC	4380	4380	5000	5240	-	-	3540	3540	4260	4260	-	-
225 SMD	4320	4320	4800	4800	-	-	3480	3480	3820	3820	-	-
250 SMA	6000	6080	6000	7140	6000	7880	4920	4920	5820	5820	6000	6380
250 SMB	5620	5620	6000	6320	6000	7480	4540	4540	5100	5100	6000	6040
250 SMC	5260	5260	5960	5960	6000	6860	4220	4220	4760	4760	5520	5520
280 SM_	6200	4200	7900	5900	9100	7100	4850	2850	6100	4100	7000	5000
315 SM_	6100	4100	9250	7250	10700	8700	4750	2750	7100	5100	8150	6150
315 ML_	6000	4000	9150	7150	10550	8550	4700	2700	7050	5050	8050	6050
315 LK_	5900	3900	8950	6950	10250	8250	4600	2600	6850	4850	7750	5750
355 SM_	2950	6750	8450	12250	10250	14050	1650	5450	5750	9550	7050	10850
355 ML_	2900	6700	8350	12150	10100	13900	1550	5350	5600	9400	6850	10650
355 LK_	-	-	-	-	9800	13600	-	-	-	-	6600	10400

Mounting arrangement IM V1

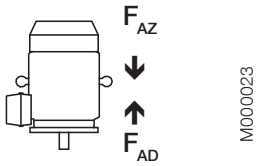

Motor size	20,000 hours 2-pole FAD N	FAZ N	4-pole FAD N	FAZ N	6-pole FAD N	FAZ N	40,000 hours 2-pole FAD N	FAZ N	4-pole FAD N	FAZ N	6-pole FAD N	FAZ N
160 MLA	3100	2578	3820	3150	4100	3410	2570	2048	3120	2450	3325	2635
160 MLB	3120	2570	3880	3085	4120	3240	2580	2030	3180	2385	3360	2480
160 MLC	3080	2500	3620	2770	3680	2700	2560	1980	2985	2135	3005	2025
160 MLD	3220	2540	3420	2470	-	-	2665	1985	2820	1870	-	-
160 MLE	2900	2150	-	-	-	-	2420	1670	-	-	-	-
180 MLA	3660	2940	4160	3150	4800	3675	3060	2340	3460	2450	3940	2815
180 MLB)	3760	2960	4220	3095	4500	3285	3125	2320	3500	2375	3700	2485
180 MLC)	-	-	3880	2660	-	-	-	-	3220	2000	-	-
200 MLA	5000	3965	5000	4680	5000	5265	4200	3125	5000	3640	5000	4065
200 MLB	5000	3905	5000	4060	5000	4800	4220	3085	4700	3120	5000	3660
200 MLC	4600	3385	5000	3775	5000	4165	3880	2665	4520	2875	5000	3105
200 MLD	4660	3370	-	-	-	-	3925	2635	-	-	-	-
225 SMA	5000	4375	5000	5445	5000	5735	4780	3455	5000	4225	5000	4395
225 SMB	5000	4245	5000	5175	5000	5155	4780	3345	5000	3995	5000	3915
225 SMC	5000	3670	5000	4445	-	-	4440	2900	5000	3425	-	-
225 SMD	5000	3590	5000	3895	-	-	4400	2790	5000	2935	-	-
250 SMA	6000	5345	6000	6300	6000	6950	5840	4225	6000	4920	6000	5350
250 SMB	6000	4830	6000	5325	6000	6370	5640	3810	6000	4085	6000	4830
250 SMC	6000	4395	6000	4900	6000	5575	5400	3415	6000	3700	6000	4135
280 SM_	7800	3100	9950	4550	11650	5450	6450	1750	8150	2750	9550	3300
315 SM_	8300	2600	12200	5300	14500	6150	6950	1250	10000	3150	11950	3600
315 ML_	8700	2200	12650	4850	15150	5500	7350	850	10500	2650	12600	2950
315 LK_	9350	1550	13650	3850	16550	4100	8000	200	11500	1650	14000	1550
355 SM_	6600	4300	13900	8600	17000	9550	5200	2950	11100	5800	13700	6250
355 ML_	7050	3800	14600	7900	18000	8550	5700	2450	11800	5100	14700	5250
355 LK_	-	-	-	-	19500	7050	-	-	-	-	16200	3750

Ordering information

When placing an order, please state the following minimum data in the order, as in example.

The product code of the motor is composed in accordance with the following example.

Motor type	**M4BP 280 SMB**
Pole number	**2**
Mounting arrangement (IM code)	**IM B3 (IM 1001)**
Rated output	**75 kW**
Product code	**3GBP281220-ADK**
Variant codes if needed	

Motor size

A B C D.E.F. G

M4BP 280 SMB 3GBP 281 220 - A D K 003 etc.

1 2 3 4 5 6 7 8 9 10 11 12 13 14

A Motor type
B Motor size
C Product code
D Mounting arrangement code
E Voltage and frequency code
F Generation code
G Variant codes

Explanation of the product code:

Positions 1 to 4

3GBP = Totally enclosed fan cooled squirrel cage motor with cast iron frame

Positions 5 and 6

IEC-frame

16 = 160
18 = 180
20 = 200
22 = 225
25 = 250
28 = 280
31 = 315
35 = 355

Position 7

Speed (Pole pairs)

1 = 2 poles
2 = 4 poles
3 = 6 poles

Position 8 to 10

Serial number

Position 11

- (dash)

Position 12

Mounting arrangement

A = Foot-mounted, top-mounted terminal box
R = Foot-mounted, terminal box RHS seen from D-end
L = Foot-mounted, terminal box LHS seen from D-end
B = Flange-mounted, large flange
C = Flange-mounted, small flange (sizes 71 to 112)
H = Foot- and flange-mounted, terminal box top-mounted
J = Foot- and flange-mounted, small flange with tapped holes
S = Foot- and flange-mounted, terminal box RHS seen from D-end
T = Foot- and flange-mounted, terminal box LHS seen from D-end
V = Flange-mounted, special flange
F = Foot- and flange-mounted. Special flange

Position 13

Voltage and frequency

Single-speed motors

B 380 VΔ 50 Hz
D 400 VΔ, 415 VΔ, 690 VY 50 Hz
E 500 VΔ 50 Hz
F 500 VY 50 Hz
S 230 VΔ, 400 VY, 415 VY 50 Hz
T 660 VΔ 50 Hz
U 690 VΔ 50 Hz
X Other rated voltage, connection or frequency, 690 V maximum

Two-speed motors

A 220 V 50 Hz
B 380 V 50 Hz
D 400 V 50 Hz
E 500 V 50 Hz
S 230 V 50 Hz
X Other rated voltage, connection or frequency, 690 V maximum

Remark

For voltage code X the variant code 209 non-standard voltage or frequency (special winding) must be ordered.

Position 14

Generation code

A, B, C...G...K

The product code must be, if needed, followed by variant codes.

Process performance premium efficiency cast iron motors IE3

Technical data for totally enclosed squirrel cage three phase motors

IP 55 - IC 411 - Insulation class F - Temperature rise class B
IE3 efficiency class according to IEC 60034-30;2008

Output kW	Motor type	Product code	Speed r/min	Efficiency IEC 60034-2-1; 2007 Full load 100%	3/4 load 75%	1/2 load 50%	Power factor cos φ	Current I_N A	I_s/I_N	Torque T_N Nm	T_l/T_N	T_b/T_N	Moment of inertia J = 1/4 GD² kgm²	Weight kg	Sound pressure level L_{PA} dB
3000 r/min = 2-poles		**400 V 50 Hz**						**CENELEC-design**							
11	**M4BP 160 MLA**	3GBP 161 051-••G	2947	91.4	91.7	90.8	0.92	18.8	7.5	35.6	2.2	3.1	0.054	142	69
15	**M4BP 160 MLB**	3GBP 161 052-••G	2937	91.9	92.6	92.3	0.92	25.6	7.7	48.7	2.7	3.0	0.064	171	69
18.5	**M4BP 160 MLC**	3GBP 161 053-••G	2935	92.4	93.1	93.0	0.93	31.0	8.0	60.1	2.9	3.1	0.074	184	69
22	**M4BP 180 MLA**	3GBP 181 051-••G	2948	92.8	93.4	93.2	0.91	37.6	8.0	71.2	2.9	3.1	0.118	235	69
30	**M4BP 200 MLA**	3GBP 201 051-••G	2957	93.5	93.7	93.1	0.90	51.4	8.0	96.8	2.7	3.1	0.198	299	72
37	**M4BP 200 MLB**	3GBP 201 052-••G	2954	93.7	94.1	93.7	0.91	62.6	7.9	119	2.7	3.0	0.219	314	72
45	**M4BP 225 SMA**	3GBP 221 051-••G	2967	94.3	94.3	93.4	0.91	75.6	8.0	144	2.5	2.6	0.336	410	74
55	**M4BP 250 SMA**	3GBP 251 051-••G	2969	94.7	94.8	94.2	0.90	93.1	7.5	176	2.4	2.8	0.588	453	75
75	**M4BP 280 SMB**	3GBP 281 220-••K	2979	95.5	95.4	94.6	0.87	130	7.3	240	2.1	2.9	0.9	665	77
90	**M4BP 280 SMC**	3GBP 281 230-••K	2981	95.7	95.6	94.8	0.88	154	8.0	288	2.5	3.1	1.15	725	77
110	**M4BP 315 SMB**	3GBP 311 220-••K	2982	95.9	95.7	95.0	0.87	190	6.7	352	1.9	2.6	1.4	940	77
132	**M4BP 315 SMC**	3GBP 311 230-••K	2984	95.9	95.9	95.3	0.88	225	7.9	422	2.4	3.0	1.7	1025	77
160	**M4BP 315 MLA**	3GBP 311 410-••K	2982	96.1	96.1	95.8	0.90	267	7.3	512	2.2	2.7	2.1	1190	77
200	**M4BP 315 MLB**	3GBP 311 420-••K	2982	96.2	96.2	96.0	0.90	333	6.8	640	1.9	2.6	2.2	1220	77
200 [1]	**M4BP 355 SMA**	3GBP 351 210-••K	2984	96.2	96.1	95.5	0.89	337	7.6	640	2.0	3.1	3.0	1600	83
250	**M4BP 315 LKB**	3GBP 311 820-••K	2981	96.3	96.3	96.2	0.91	411	7.9	800	2.5	2.7	2.9	1540	77
250 [1]	**M4BP 355 SMB**	3GBP 351 220-••K	2983	96.3	96.3	95.9	0.90	416	7.6	800	2.2	3.0	3.4	1680	83
315 [1]	**M4BP 355 SMC**	3GBP 351 230-••K	2984	96.4	96.4	95.9	0.89	529	7.8	1008	2.3	2.8	3.6	1750	83
355 [1]	**M4BP 355 MLA**	3GBP 351 410-••K	2982	96.5	96.5	96.3	0.90	589	7.5	1136	2.3	2.6	4.1	2000	83
1500 r/min = 4-poles		**400 V 50 Hz**						**CENELEC-design**							
11	**M4BP 160 MLA**	3GBP 162 051-••G	1473	92.3	92.6	92.0	0.83	20.7	8.0	71.3	2.9	3.3	0.11	174	62
15	**M4BP 160 MLB**	3GBP 162 052-••G	1474	92.7	93.0	92.4	0.84	27.8	8.0	97.1	2.8	3.4	0.126	187	62
18.5	**M4BP 180 MLA**	3GBP 182 051-••G	1480	93.2	93.7	93.5	0.84	34.1	7.7	119	2.5	2.9	0.22	235	62
22	**M4BP 180 MLB**	3GBP 182 052-••G	1477	93.0	93.6	93.6	0.84	40.6	7.9	142	2.8	2.9	0.22	236	62
30	**M4BP 200 MLA**	3GBP 202 051-••G	1482	94.0	94.4	94.1	0.85	54.1	7.5	193	2.5	2.9	0.374	319	63
37	**M4BP 225 SMA**	3GBP 222 051-••G	1482	94.3	94.4	93.7	0.87	65.0	8.0	238	2.5	2.8	0.553	399	66
45	**M4BP 225 SMB**	3GBP 222 052-••G	1482	94.2	94.4	93.8	0.87	79.2	8.2	289	2.6	2.8	0.553	399	66
55	**M4BP 250 SMA**	3GBP 252 051-••G	1481	95.1	95.3	94.9	0.86	97.0	8.0	354	3.0	2.8	0.948	476	67
75	**M4BP 280 SMB**	3GBP 282 220-••K	1486	95.7	95.8	95.3	0.84	133	7.4	481	2.5	2.8	1.5	665	66
90	**M4BP 280 SMC**	3GBP 282 230-••K	1487	95.9	96.0	95.5	0.85	159	7.9	577	2.9	3.0	1.85	725	66
110	**M4BP 315 SMC**	3GBP 312 230-••K	1490	96.3	96.3	95.7	0.85	193	7.8	704	2.4	3.1	2.9	1000	68
132	**M4BP 315 SMD**	3GBP 312 240-••K	1490	96.4	96.4	95.9	0.85	232	7.9	845	2.6	3.2	3.2	1065	68
160	**M4BP 315 MLB**	3GBP 312 420-••K	1489	96.4	96.4	96.1	0.86	278	7.9	1026	2.7	3.0	3.9	1220	68
200	**M4BP 315 LKB**	3GBP 312 820-••K	1490	96.5	96.5	96.3	0.87	343	7.6	1281	2.5	2.9	5.0	1520	74
200	**M4BP 355 SMA**	3GBP 352 210-••K	1490	96.5	96.5	96.3	0.87	343	7.3	1281	2.1	2.7	5.9	1610	74
250	**M4BP 315 LKC**	3GBP 312 830-••K	1491	96.6	96.6	96.4	0.87	429	7.8	1601	2.3	3.0	5.5	1600	74
250	**M4BP 355 SMB**	3GBP 352 220-••K	1491	96.6	96.6	96.3	0.87	429	7.8	1601	2.5	2.9	6.9	1780	74
315	**M4BP 355 SMC**	3GBP 352 230-••K	1491	96.7	96.7	96.3	0.85	553	7.4	2017	2.8	2.9	7.2	1820	74
355	**M4BP 355 MLA**	3GBP 352 410-••K	1491	96.7	96.7	96.4	0.86	616	7.9	2273	2.7	2.9	8.4	2140	74

[1] 3dB(A) sound pressure level reduction with unidirectional fan construction. Direction of rotation must be stated when ordering, see variant codes 044 and 045.

The two bullets in the product code indicate choice of mounting arrangements, voltage and frequency code (see ordering information page).

I_s / I_N = Starting current
T_l / T_N = Locked rotor torque
T_b / T_N = Breakdown torque

Efficiency values are given according to IEC 60034-2-1; 2007.
Please note that the values are not comparable without knowing the testing method.
ABB has calculated the efficiency values according to indirect method, stray load losses (additional losses) determined from measuring.

Process performance premium efficiency cast iron motors IE3

Technical data for totally enclosed squirrel cage three phase motors

IP 55 - IC 411 - Insulation class F - Temperature rise class B
IE3 efficiency class according to IEC 60034-30;2008

Output kW	Motor type	Product code	Speed r/min	Efficiency IEC 60034-2-1; 2007 Full load 100%	3/4 load 75%	1/2 load 50%	Power factor cos φ	Current I_N A	I_s/I_N	Torque T_N Nm	T_l/T_N	T_b/T_N	Moment of inertia J = 1/4 GD² kgm²	Weight kg	Sound pressure level L_{PA} dB
1000 r/min = 6-poles		**400 V 50 Hz**						**CENELEC-design**							
7.5	**M4BP 160 MLA**	3GBP 163 051-••G	977	89.9	90.5	89.9	0.78	15.4	7.7	73.3	2.3	3.4	0.116	173	59
11	**M4BP 160 MLB**	3GBP 163 052-••G	979	90.8	91.1	90.2	0.75	23.3	7.6	107	2.1	3.6	0.134	186	59
15	**M4BP 180 MLA**	3GBP 183 051-••G	982	91.2	91.7	91.0	0.75	31.6	6.8	145	2.0	2.8	0.218	234	59
18.5	**M4BP 200 MLA**	3GBP 203 051-••G	990	92.9	93.0	92.0	0.80	35.9	7.8	178	2.5	3.3	0.456	292	63
22	**M4BP 200 MLB**	3GBP 203 052-••G	990	92.9	93.1	92.3	0.81	42.1	8.0	212	2.5	3.3	0.539	318	63
30	**M4BP 225 SMA**	3GBP 223 051-••G	989	93.5	93.7	93.1	0.81	57.1	7.9	289	2.7	3.2	0.827	393	63
37	**M4BP 250 SMA**	3GBP 253 051-••G	991	93.8	94.1	93.5	0.84	67.7	7.5	356	2.7	2.9	1.512	468	63
45	**M4BP 280 SMB**	3GBP 283 220-••K	991	94.8	94.9	94.2	0.86	79.6	6.9	433	2.4	2.6	2.2	680	65
55	**M4BP 280 SMC**	3GBP 283 230-••K	990	95.1	95.1	94.7	0.86	97.0	6.8	530	2.4	2.6	2.85	725	65
75	**M4BP 315 SMC**	3GBP 313 230-••K	993	95.3	95.3	94.8	0.84	135	7.0	721	2.2	2.8	4.9	1000	67
90	**M4BP 315 SMD**	3GBP 313 240-••K	994	95.5	95.5	94.9	0.83	163	7.2	864	2.4	2.9	4.9	1040	67
110	**M4BP 315 MLB**	3GBP 313 420-••K	993	95.5	95.5	95.1	0.84	197	6.9	1057	2.3	2.7	6.3	1200	68
132	**M4BP 315 LKA**	3GBP 313 810-••K	993	95.7	95.7	95.4	0.83	239	6.9	1269	2.4	2.7	7.3	1410	68
160	**M4BP 315 LKC**	3GBP 313 830-••K	994	95.9	95.9	95.5	0.83	290	7.4	1537	2.7	2.9	9.2	1600	68
160	**M4BP 355 SMB**	3GBP 353 220-••K	995	95.9	95.9	95.5	0.83	290	7.0	1535	2.1	2.7	9.7	1680	73
200	**M4BP 355 SMC**	3GBP 353 230-••K	995	96.0	96.0	95.7	0.83	362	7.3	1919	2.3	2.8	11.3	1820	73
250	**M4BP 355 MLB**	3GBP 353 420-••K	995	96.0	96.0	95.8	0.83	452	7.1	2399	2.3	2.7	13.5	2180	73
315	**M4BP 355 LKA**	3GBP 353 810-••K	994	96.0	96.0	95.8	0.83	570	6.9	3026	2.3	2.6	15.5	2500	76
355	**M4BP 355 LKB**	3GBP 353 820-••K	995	96.0	96.0	95.6	0.80	667	7.7	3407	2.7	2.9	16.5	2600	76

The two bullets in the product code indicate choice of mounting arrangements, voltage and frequency code (see ordering information page).

I_s / I_N = Starting current
T_l / T_N = Locked rotor torque
T_b / T_N = Breakdown torque

Efficiency values are given according to IEC 60034-2-1; 2007.
Please note that the values are not comparable without knowing the testing method.
ABB has calculated the efficiency values according to indirect method, stray load losses (additional losses) determined from measuring.

Total offer of motors, generators and mechanical power transmission products with a complete portfolio of services

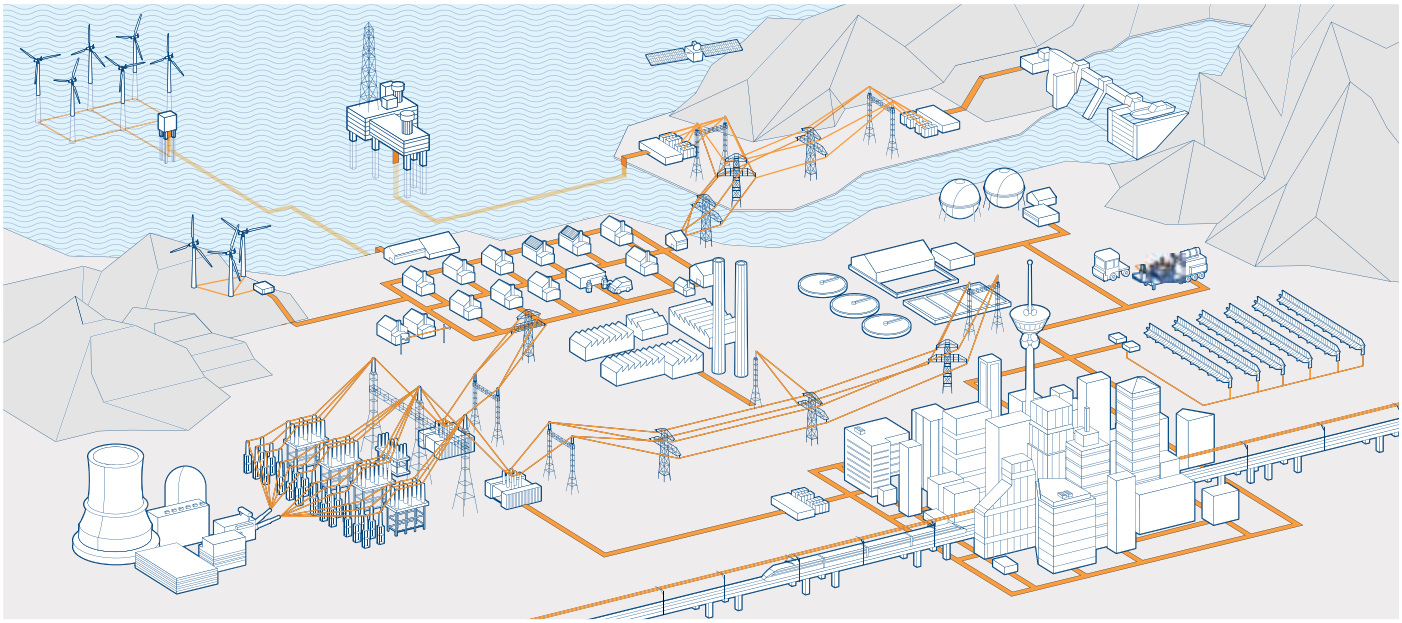

ABB is the leading manufacturer of low, medium and high voltage motors and generators, mechanical power transmission products with an offering of a complete portfolio of services. Our in-depth knowledge of virtually every type of industrial processing ensures we always specify the best solution for your needs.

Low and high voltage IEC induction motors
– Process performance motors
– General performance motors
– High voltage cast iron motors
– Induction modular motors
– Slip-ring modular motors
– Synchronous reluctance motors

Low and medium voltage NEMA motors
– Steel frame open drip proof (ODP) motors
– Weather protected, water cooled, fan ventilated
– Cast iron frame (TEFC)
– Air to air cooled (TEAAC) motors

Motors and generators for explosive atmospheres
– IEC and NEMA motors and generators, for all protection types

Synchronous motors

Synchronous generators
– Synchronous generators for diesel and gas engines
– Synchronous generators for steam and gas turbines

Wind power generators

Generators for small hydro

Other motors and generators
– Brake motors
– DC motors and generators
– Gear motors
– Marine motors and generators
– Single phase motors
– Motors for high ambient temperatures
– Permanent magnet motors and generators
– High speed motors
– Smoke extraction motors
– Wash down motors
– Water cooled motors
– Generator sets
– Roller table motors
– Servo motors
– Traction motors

Life cycle services
– Installation and commissioning
– Service contracts
– Preventive maintenance
– Spare parts
– Diagnosis
– Repair and refurbishment
– Site survey and overhaul
– Replacement motors and generators
– Technical support and consulting
– Trainings

Mechanical power transmission components, bearings, gears

Visit our web site

www.abb.com/motors&generators

Motors & Generators
> Low voltage motors
>> Process performance motors
>>> Cast iron motors
>>> Aluminum motors
>>> Premium efficiency motors
General performance motors
Motors for hazardous areas
Marine motors
Motors for additional applications

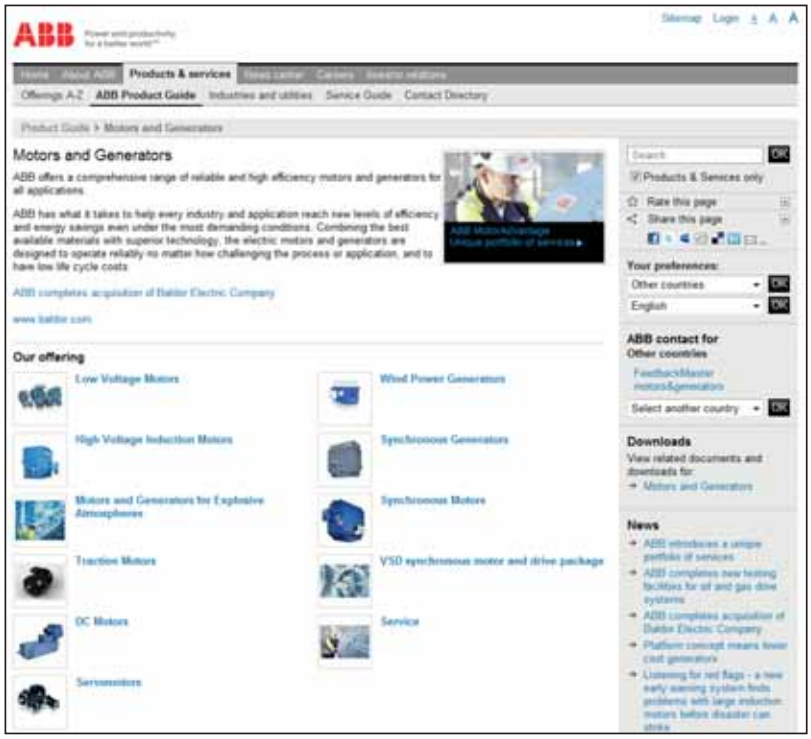

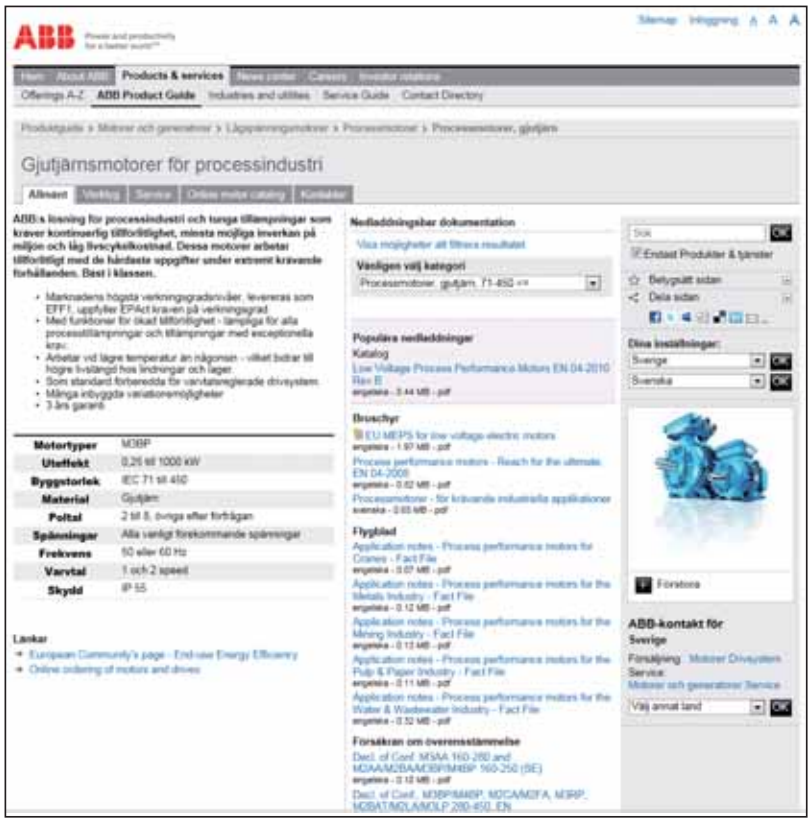

Contact us

www.abb.com/motors&generators

We reserve the right to make technical changes or modify the contents of this document without prior notice. With regard to purchase orders, the agreed particulars shall prevail. ABB does not accept any responsibility what so ever for potential errors or possible lack of information in this document.

We reserve all rights in this document and in the subject matter and illustrations contained herein. Any reproduction, disclosure to third parties or utilization of its contents – in whole or in parts – is forbidden without prior written consent of ABB.

© Copyright 2011 ABB.
All rights reserved.

9AKK104556_EN_06-2011; Waasa Graphics Oy

Power and productivity
for a better world™